Vehicle: [Fleet] 2026 Chevrolet Silverado MD (CC56403) 2WD Reg Cab WT

Vehicle: [Fleet] 2026 Chevrolet Silverado MD (CC56403) 2WD Reg Cab WT (✔ Complete)

Window Sticker

SUMMARY

[Fleet] 2026 Chevrolet Silverado MD (CC56403) 2WD Reg Cab WT MSRP:$59,585.00

Interior:Dark Ash seats with Jet Black interior accents, Vinyl seat trim

Exterior 1:Summit White

Exterior 2:No color has been selected.

Engine, Duramax 6.6L Turbo-Diesel V8, B20-Diesel compatible

Rugged Duty Service Transmission, Automatic close-ratio 6 SPD with double overdrive, Allison, A1700RDS

OPTIONS

CODE	MODEL		MSRP
CC56403	[Fleet] 2026 Chevrolet Silverado MD (CC56403) 2WD Reg Cab WT		$59,585.00
	OPTIONS		
R7N	5500 HD Series	Inc.	
GZG	GVWR, 19,500 lbs. (8845 kg)		$2,255.00
R6G	26,000 lbs. GCWR (11,793 kg)		$0.00
L5D	Engine, Duramax 6.6L Turbo-Diesel V8, B20-Diesel compatible		$0.00
PTO	Power Take Off, engine control provisions		$280.00
MIU	Rugged Duty Service Transmission, Automatic close-ratio 6 SPD with double overdrive, Allison, A1700RDS		$290.00
066	Rear axle, 4.10 ratio		$0.00
FTA	Front axle, 7,000 lbs, Dana Spicer D800-N, "I"-beam, non-driving		$0.00
FK6	Front suspension, 7,000 lbs. (3,175 kg) multi-leaf, includes shock absorbers		$0.00
HD1	Rear axle, 15,000 lb. (6,804 kg)		$675.00
FU7	Rear suspension, 15,500 lbs. (7,031 kg) multi-leaf, vari-rate		$50.00
ED9	Wheelbase, 165" (419.1 cm), 84" CA		$0.00
1WT	WT Preferred Equipment Group		$0.00
PWQ	Wheels, 19.5" x 6.75", steel, Black painted, 8-holes, hub piloted		$0.00
XEY	Tires, front 225/70R19.5G highway blackwall Pirelli		$0.00
YEY	Tires, rear 225/70R19.5G highway blackwall Pirelli		$0.00
9L3	Spare tire delete		$0.00
ZY1	Paint, solid		$0.00

This document contains information considered Confidential between GM and its Clients uniquely. The information provided is not intended for public disclosure. Prices, specifications, and availability are subject to change without notice, and do not include certain fees, taxes and charges that may be required by law or vary by manufacturer or region. Performance figures are guidelines only, and actual performance may vary. Photos may not represent actual vehicles or exact configurations. Content based on report preparer's input is subject to the accuracy of the input provided.
Data Version: 28141. Data Updated: Apr 2, 2026 1:49:00 AM UTC.

Vehicle: [Fleet] 2026 Chevrolet Silverado MD (CC56403) 2WD Reg Cab WT (✓ Complete)

GAZ	Summit White		$0.00
A52	Seats, front 40/20/40 split-bench, cloth or vinyl 3-passenger.		$400.00
H2Q	Dark Ash seats with Jet Black interior accents, Vinyl seat trim		$0.00
IOR	Audio system, Chevrolet Infotainment System with 7" diagonal color touch-screen, AM/FM stereo		$295.00
PCJ	Vocational Specific Heavy Suspension Package		$0.00
K05	Engine block heater		$100.00
G86	Axle, limited slip, Dana Spicer Truetrac, torque proportioning limited slip		$395.00
7Y8	Batteries, heavy-duty dual 1300 cold-cranking amps		$200.00
BTN	Battery, top post threaded, battery jump start stud		$50.00
KW5	Alternator, 220 amps		$150.00
AKO	Glass, deep-tinted		$100.00
VK3	License plate kit, front		$15.00
UQ3	6-speaker audio system	Inc.	
___	Bluetooth for phone, personal cell phone connectivity to vehicle audio system	Inc.	
AG1	Seat adjuster, driver 10-way power	Inc.	
A31	Windows, power with driver express up and down and express down on all other windows		$290.00
AQQ	Remote Keyless Entry		$175.00
KI4	Power outlet, 120-volt AC		$175.00
DGP	Mirrors, outside, black, heated power-adjustable, high-visibility vertical camper-style, and lower convex spotter glass, manual-folding.		$795.00
	SUBTOTAL		**$66,275.00**
	Adjustments Total		$0.00
	Tire Weight Tax		$26.64
	Destination Charge		$2,095.00
	TOTAL PRICE		**$68,396.64**

Technical Specifications

This document contains information considered Confidential between GM and its Clients uniquely. The information provided is not intended for public disclosure. Prices, specifications, and availability are subject to change without notice, and do not include certain fees, taxes and charges that may be required by law or vary by manufacturer or region. Performance figures are guidelines only, and actual performance may vary. Photos may not represent actual vehicles or exact configurations. Content based on report preparer's input is subject to the accuracy of the input provided.
Data Version: 28141. Data Updated: Apr 2, 2026 1:49:00 AM UTC.

Vehicle: [Fleet] 2026 Chevrolet Silverado MD (CC56403) 2WD Reg Cab WT (Complete)

Powertrain

Transmission

Drivetrain	Rear Wheel Drive	Trans Order Code	MIU
Trans Type	6	Trans Description Cont.	Automatic
Trans Description Cont. Again	N/A	First Gear Ratio (:1)	3.10
Second Gear Ratio (:1)	1.80	Third Gear Ratio (:1)	1.40
Fourth Gear Ratio (:1)	1.00	Fifth Gear Ratio (:1)	0.70
Sixth Gear Ratio (:1)	0.61	Reverse Ratio (:1)	N/A
Clutch Size	N/A	Trans Power Take Off	Yes
Final Drive Axle Ratio (:1)	N/A	Transfer Case Model	N/A
Transfer Case Power Take Off	N/A	Second Reverse Gear Ratio (:1)	N/A
Third Reverse Gear Ratio (:1)	N/A	Fourth Reverse Gear Ratio (:1)	N/A
Fifth Reverse Gear Ratio (:1)	N/A	Sixth Reverse Gear Ratio (:1)	N/A
Transmission Manufacturer	Allison	Transmission Type	A1700RDS

Engine

Engine Order Code	L5D	Engine Type	Turbocharged Diesel V8
Displacement	6.6L/403	Fuel System	Direct Injection
SAE Net Horsepower @ RPM	350 @ 2500	SAE Net Torque @ RPM	750 @ 1400
Engine Oil Cooler	Yes	Governed Engine Speed (RPM)	N/A
Engine Series	Duramax		

Electrical

Cold Cranking Amps @ 0° F (Primary)	1300	Cold Cranking Amps @ 0° F (2nd)	1300
Cold Cranking Amps @ 0° F (3rd)	N/A	Maximum Alternator Capacity (amps)	220

Cooling System

Total Cooling System Capacity	30 qts

Vehicle

Vehicle

Axle Ratio - Low Rear (:1)	4.1	As Spec Curb Weight - Front	4735.00 lbs

This document contains information considered Confidential between GM and its Clients uniquely. The information provided is not intended for public disclosure. Prices, specifications, and availability are subject to change without notice, and do not include certain fees, taxes and charges that may be required by law or vary by manufacturer or region. Performance figures are guidelines only, and actual performance may vary. Photos may not represent actual vehicles or exact configurations. Content based on report preparer's input is subject to the accuracy of the input provided.
Data Version: 28141. Data Updated: Apr 2, 2026 1:49:00 AM UTC.

Vehicle: [Fleet] 2026 Chevrolet Silverado MD (CC56403) 2WD Reg Cab WT (Complete)

Vehicle

Vehicle

As Spec Curb Weight - Rear	2905.00 lbs

Chassis

Weight Information

Standard Weight - Front	0.00 lbs	Standard Weight - Rear	0.00 lbs
Total Weight	7990.00 lbs	Gross Axle Wt Rating - Front	7000 lbs
Gross Axle Wt Rating - Rear	15000 lbs	Curb Weight - Front	4735 lbs
Curb Weight - Rear	2905 lbs	Option Weight - Front	0.00 lbs
Option Weight - Rear	0.00 lbs	Reserve Axle Capacity - Front	2265.00 lbs
Reserve Axle Capacity - Rear	12095.00 lbs	As Spec'd Curb Weight	7640.00 lbs
As Spec'd Payload	11860.00 lbs	Gross Combined Wt Rating	26000 lbs
Cargo Weight	0.00 lbs	Gross Vehicle Weight	7990.00 lbs
Axle Weight	N/A	Gross Axle Weight Rating	22000.00 lbs
Curb Weight	7640.00 lbs	Reserve Axle Capacity	14360.00 lbs
Total Option Weight	0.00 lbs	Payload Weight Front	0.00 lbs
Payload Weight Rear	0.00 lbs	Maximum Axle Rating Front	7000.00 lbs
Maximum Axle Rating Rear	15000.00 lbs	Maximum Axle Rating Total	22000.00 lbs
Gross Vehicle Weight Rating	19500.00 lbs	Front PayLoad	N/A
Rear Payload	N/A	Total Payload Weight (Cargo + Driver + Body)	350.00 lbs

Frame

Frame Type	High Strength Low Alloy Steel	Sect Modulus Rails Only	8.08 Front/10.93 Belly/8.47 Rear in^3
Frame RBM	404000 Front/546500 Belly/423500 Rear	Frame Strength	50000 lbs
Frame Thickness	0.3125 in		

Suspension

Suspension Type - Front	Multi-Leaf	Suspension Type - Rear	Multi-Leaf
Spring Capacity - Front	7000 lbs	Spring Capacity - Rear	15500 lbs

This document contains information considered Confidential between GM and its Clients uniquely. The information provided is not intended for public disclosure. Prices, specifications, and availability are subject to change without notice, and do not include certain fees, taxes and charges that may be required by law or vary by manufacturer or region. Performance figures are guidelines only, and actual performance may vary. Photos may not represent actual vehicles or exact configurations. Content based on report preparer's input is subject to the accuracy of the input provided.
Data Version: 28141. Data Updated: Apr 2, 2026 1:49:00 AM UTC.

Vehicle: [Fleet] 2026 Chevrolet Silverado MD (CC56403) 2WD Reg Cab WT (✓ Complete)

Chassis

Suspension

Axle Type - Front	Dana Spicer I-Beam	Axle Type - Rear	N/A
Axle Capacity - Front	7000 lbs	Axle Capacity - Rear	15000 lbs
Axle Ratio (:1) - Front	N/A	Axle Ratio (:1) - Rear	4.10
Shock Absorber Diameter - Front	51 mm	Shock Absorber Diameter - Rear	N/A
Stabilizer Bar Diameter - Front	N/A	Stabilizer Bar Diameter - Rear	N/A

Tires

Front Tire Order Code	XEY	Rear Tire Order Code	YEY
Spare Tire Order Code	N/A	Front Tire Size	225/70R19.5G
Rear Tire Size	225/70R19.5G	Spare Tire Size	N/A
Front Tire Capacity	7940 lbs	Rear Tire Capacity	15000 lbs
Spare Tire Capacity	N/A	Revolutions/Mile @ 45 mph - Front	N/A
Revolutions/Mile @ 45 mph - Rear	N/A	Revolutions/Mile @ 45 mph - Spare	N/A
Tire Rating Total	22940.00		

Wheels

Front Wheel Size	19.5 x 6.75 in	Rear Wheel Size	19.5 x 6.75 in
Spare Wheel Size	N/A	Front Wheel Material	Steel
Rear Wheel Material	Steel	Spare Wheel Material	N/A
Front Bolt Pattern	8 Hole 10.83"	Rear Bolt Pattern	8 Hole 10.83"
Spare Bolt Pattern	N/A		

Steering

Steering Type	Pwr	Steering Ratio (:1), On Center	16.6
Steering Ratio (:1), At Lock	19.6	Turning Diameter - Curb to Curb	47.2 ft
Turning Diameter - Wall to Wall	48.8 ft		

Brakes

Brake Type	Pwr	Brake ABS System	4-Channel
Brake ABS System (Second Line)	N/A	Disc - Front (Yes or)	Yes

This document contains information considered Confidential between GM and its Clients uniquely. The information provided is not intended for public disclosure. Prices, specifications, and availability are subject to change without notice, and do not include certain fees, taxes and charges that may be required by law or vary by manufacturer or region. Performance figures are guidelines only, and actual performance may vary. Photos may not represent actual vehicles or exact configurations. Content based on report preparer's input is subject to the accuracy of the input provided.
Data Version: 28141. Data Updated: Apr 2, 2026 1:49:00 AM UTC.

Vehicle: [Fleet] 2026 Chevrolet Silverado MD (CC56403) 2WD Reg Cab WT (✓ Complete)

Chassis

Brakes

Disc - Rear (Yes or)	Yes	Front Brake Rotor Diam x Thickness	15.375 x 1.54 in
Rear Brake Rotor Diam x Thickness	15.375 x 1.54 in	Drum - Front (Yes or)	N/A
Front Drum Diam x Width	N/A	Drum - Rear (Yes or)	N/A
Rear Drum Diam x Width	N/A		

Fuel Tank

Fuel Tank Capacity, Approx	40 gal	Aux Fuel Tank Capacity, Approx	N/A
Fuel Tank Location	Behind Rear Axle	Aux Fuel Tank Location	N/A

Trailering

Trailer Weight	0.0 lbs

Dimensions

Interior Dimensions

Passenger Capacity	3	Front Head Room	42.8 in
Front Leg Room	45.28 in	Front Shoulder Room	66.02 in
Front Hip Room	60.75 in		

Exterior Dimensions

Wheelbase	165 in	Length, Overall w/o rear bumper	N/A
Length, Overall	248.5 in	Width, Max w/o mirrors	92.705 in
Height, Overall	82.81 in	Overhang, Front	34.4 in
Overhang, Rear w/o bumper	49 in	Front Bumper to Back of Cab	115.47 in
Cab to Axle	83.86 in	Cab to End of Frame	133 in
Ground to Top of Load Floor	N/A	Ground to Top of Frame	29.7 front/32.2 rear in
Frame Width, Rear	34.1 in	Ground Clearance, Front	N/A
Ground Clearance, Rear	N/A	Body Length	0.0 ft
Cab to Body	3.0 in	Frontal Area	ft^2

This document contains information considered Confidential between GM and its Clients uniquely. The information provided is not intended for public disclosure. Prices, specifications, and availability are subject to change without notice, and do not include certain fees, taxes and charges that may be required by law or vary by manufacturer or region. Performance figures are guidelines only, and actual performance may vary. Photos may not represent actual vehicles or exact configurations. Content based on report preparer's input is subject to the accuracy of the input provided.
Data Version: 28141. Data Updated: Apr 2, 2026 1:49:00 AM UTC.

Vehicle: [Fleet] 2026 Chevrolet Silverado MD (CC56403) 2WD Reg Cab WT (✔ Complete)

Medium Duty

Medium Duty Performance

Front Axle %	N/A	Rear Axle %	N/A
Driver Weight	350.0 lbs	Front Ground Load	N/A
Rear Ground Load	N/A	1st gear High Speed (High Axle Gear)	N/A
2nd gear High Speed (High Axle Gear)	N/A	3rd gear High Speed (High Axle Gear)	N/A
4th gear High Speed (High Axle Gear)	N/A	5th gear High Speed (High Axle Gear)	N/A
6th gear High Speed (High Axle Gear)	N/A	1st gear Low Speed (High Axle Gear)	N/A
2nd gear Low Speed (High Axle Gear)	N/A	3rd gear Low Speed (High Axle Gear)	N/A
4th gear Low Speed (High Axle Gear)	N/A	5th gear Low Speed (High Axle Gear)	N/A
6th gear Low Speed (High Axle Gear)	N/A	1st gear High Speed (Low Axle Gear)	N/A
2nd gear High Speed (Low Axle Gear)	N/A	3rd gear High Speed (Low Axle Gear)	N/A
4th gear High Speed (Low Axle Gear)	N/A	5th gear High Speed (Low Axle Gear)	N/A
6th gear High Speed (Low Axle Gear)	N/A	1st gear Low Speed (Low Axle Gear)	N/A
2nd gear Low Speed (Low Axle Gear)	N/A	3rd gear Low Speed (Low Axle Gear)	N/A
4th gear Low Speed (Low Axle Gear)	N/A	5th gear Low Speed (Low Axle Gear)	N/A
6th gear Low Speed (Low Axle Gear)	N/A	Reduction	12.71
Torque @ Clutch Engage	N/A	Starting Grade Index	N/A
1st Gear Tractive Effort (High Axle Gear)	N/A	2nd Gear Tractive Effort (High Axle Gear)	N/A
3rd Gear Tractive Effort (High Axle Gear)	N/A	4th Gear Tractive Effort (High Axle Gear)	N/A
5th Gear Tractive Effort (High Axle Gear)	N/A	6th Gear Tractive Effort (High Axle Gear)	N/A
1st Gear Tractive Effort (Low Axle Gear)	N/A	2nd Gear Tractive Effort (Low Axle Gear)	N/A
3rd Gear Tractive Effort (Low Axle Gear)	N/A	4th Gear Tractive Effort (Low Axle Gear)	N/A
5th Gear Tractive Effort (Low Axle Gear)	N/A	6th Gear Tractive Effort (Low Axle Gear)	N/A
1st Gear Gradeability (High Axle Gear)	N/A	2nd Gear Gradeability (High Axle Gear)	N/A
3rd Gear Gradeability (High Axle Gear)	N/A	4th Gear Gradeability (High Axle Gear)	N/A
5th Gear Gradeability (High Axle Gear)	N/A	6th Gear Gradeability (High Axle Gear)	N/A
1st Gear Gradeability (Low Axle Gear)	N/A	2nd Gear Gradeability (Low Axle Gear)	N/A
3rd Gear Gradeability (Low Axle Gear)	N/A	4th Gear Gradeability (Low Axle Gear)	N/A
5th Gear Gradeability (Low Axle Gear)	N/A	6th Gear Gradeability (Low Axle Gear)	N/A
Geared Road Speed	0.00 MPH	Actual Loaded Speed	N/A

This document contains information considered Confidential between GM and its Clients uniquely. The information provided is not intended for public disclosure. Prices, specifications, and availability are subject to change without notice, and do not include certain fees, taxes and charges that may be required by law or vary by manufacturer or region. Performance figures are guidelines only, and actual performance may vary. Photos may not represent actual vehicles or exact configurations. Content based on report preparer's input is subject to the accuracy of the input provided.
Data Version: 28141. Data Updated: Apr 2, 2026 1:49:00 AM UTC.

Vehicle: [Fleet] 2026 Chevrolet Silverado MD (CC56403) 2WD Reg Cab WT (✓ Complete)

Medium Duty

Medium Duty Performance

Grade (%)	2.0	Maximum Speed Gradeability	N/A
Torque Converter	N/A	Maximum Capacity @ 0° F	2600.00
% of Body on Front Axle	49.01	% of Body on Rear Axle	50.99
Body Weight Front	0.00 lbs	Body Weight Rear	0.00 lbs
Actual Loaded Speed (First Part, MPH)	N/A	Actual Loaded Speed (Second Part, RPM)	
Actual Loaded Speed (Third Part, Gear)		Road Type	Concrete
Body Weight	0.0 lbs	Driver Weight Front	N/A
Driver Weight Rear	N/A	Medium Duty Body Type	None
Front Total Load	4735.00 lbs	Rear Total Load	2905.00 lbs

This document contains information considered Confidential between GM and its Clients uniquely. The information provided is not intended for public disclosure. Prices, specifications, and availability are subject to change without notice, and do not include certain fees, taxes and charges that may be required by law or vary by manufacturer or region. Performance figures are guidelines only, and actual performance may vary. Photos may not represent actual vehicles or exact configurations. Content based on report preparer's input is subject to the accuracy of the input provided.
Data Version: 28141. Data Updated: Apr 2, 2026 1:49:00 AM UTC.

Vehicle: [Fleet] 2026 Chevrolet Silverado MD (CC56403) 2WD Reg Cab WT (✔ Complete)

Weight Distribution

SPECIFICATION SUMMARY	
Model #	CC56403
Truck/Tractor	
Wheelbase (WB)	165 in
Cab to Axle (CA)	83.86 in
Cab to Body/Swing Clear (BOC)	3.0 in
Body Length	0.0 ft
Body Weight	0.0 lbs
Cargo Weight	0.00 lbs
Front GAWR	7000 lbs
Rear GAWR	15000 lbs
GVWR	19500.00 lbs

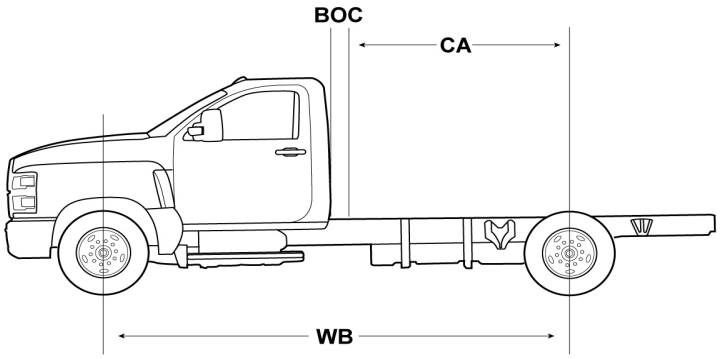

CA: 83.86 in
BOC: 3.0 in
WB: 165 in

Fr%:	**N/A**
Front Wt:	4735.00 lbs

Rr%:	N/A
Rear Wt:	2905.00 lbs

GAWR/GVWR	GVW	Remaining Payload Wt
19500.00 lbs	7990.00 lbs	11,510.00 lbs

This document contains information considered Confidential between GM and its Clients uniquely. The information provided is not intended for public disclosure. Prices, specifications, and availability are subject to change without notice, and do not include certain fees, taxes and charges that may be required by law or vary by manufacturer or region. Performance figures are guidelines only, and actual performance may vary. Photos may not represent actual vehicles or exact configurations. Content based on report preparer's input is subject to the accuracy of the input provided.
Data Version: 28141. Data Updated: Apr 2, 2026 1:49:00 AM UTC.

Vehicle: [Fleet] 2026 Chevrolet Silverado MD (CC56403) 2WD Reg Cab WT (✓ Complete)

Weight Distribution

SPECIFICATION DETAILS

	Front Axle	Rear Axle	Total
Actual			
Chassis	4735.00 lbs	2905.00 lbs	7640.00 lbs
Body	0.00 lbs	0.00 lbs	0.0 lbs
Payload	0.00 lbs	0.00 lbs	0.00 lbs
Trailer			0.0 lbs
Totals	4735.00 lbs	2905.00 lbs	7990.00 lbs
Capacity			
Axle	7000 lbs	15000 lbs	22000.00 lbs
Suspension	7000 lbs	15500 lbs	22,500.00 lbs
Tire	7940 lbs	15000 lbs	22940.00
Total Axle Rating	7000.00 lbs	15000.00 lbs	22000.00 lbs

This document contains information considered Confidential between GM and its Clients uniquely. The information provided is not intended for public disclosure. Prices, specifications, and availability are subject to change without notice, and do not include certain fees, taxes and charges that may be required by law or vary by manufacturer or region. Performance figures are guidelines only, and actual performance may vary. Photos may not represent actual vehicles or exact configurations. Content based on report preparer's input is subject to the accuracy of the input provided.
Data Version: 28141. Data Updated: Apr 2, 2026 1:49:00 AM UTC.

Vehicle: [Fleet] 2026 Chevrolet Silverado MD (CC56403) 2WD Reg Cab WT (✓ Complete)

Optional Equipment

MODEL OPTION			
CODE	**DESCRIPTION**	**MSRP**	**Invoice**
R7M	4500 HD Series (Included and only available with (C7Y) 14,001 lbs. GVWR, (C5B) 15,000 lbs. GVWR, (C7P) 16,000 lbs. GVWR or (C7R) 16,500 lbs. GVWR.)	$0.00	$0.00
R7N	5500 HD Series (Included and only available with (GZX) 17,500 lbs. GVWR, (GZJ) 18,000 lbs. GVWR or (GZG) 19,500 lbs. GVWR.)	Inc.	Inc.
R7P	6500 HD Series (Included and only available with (GZH) 21,500 lbs. GVWR, (C9U) 22,940 lbs. GVWR or (DD7) 23,500 lbs. GVWR.)	$0.00	$0.00

GVWR			
CODE	**DESCRIPTION**	**MSRP**	**Invoice**
C5B	GVWR, 15,000 lbs. (6804 kg) (Silverado 4500 HD Regular Cab 2WD models require one of the following combinations: (1) (FTC) 6.25k front axle and (FTW) 6.25k front suspension and (FN1) 10k rear axle or (GL4) 11k rear axle and (GR3) 11k rear suspension. (2) (FTC) 6.25k front axle and (FTW) 6.25k front suspension and (HD2) 13.5k rear axle and (GR4) 13.5k rear suspension. (3) (FTA) 7k front axle and (FK6) 7k front suspension and (FN1) 10k rear axle or (GL4) 11k rear axle and (GR3) 11k rear suspension or (G40) 12k rear air suspension. (4) (FTA) 7k front axle and (FK6) 7k front suspension and (HD1) 15k rear axle or (J27) 15.5k rear axle and one of the following rear suspensions: (GR4) 13.5k rear suspension, (FU7) 15.5k rear suspension, (GP1) 13.5K rear air suspension, (GP8) 15.5k rear air suspension, (91B) 13.5k LiquidSpring prep single volume rear suspension, (91C) 13.5k LiquidSpring prep stacked volume rear suspension, (91D) 15.5k LiquidSpring prep single volume rear suspension or (91E) 15.5k LiquidSpring prep stacked volume rear suspension.)	$0.00	$0.00
C7P	GVWR, 16,000 lbs. (7257 kg) (Silverado 4500 HD Regular Cab 2WD models require one of the following combinations: (1) (FTC) 6.25k front axle and (FTW) 6.25k front suspension and (FN1) 10k rear axle or (GL4) 11k rear axle and (GR3) 11k rear suspension. (2) (FTC) 6.25k front axle and (FTW) 6.25k front suspension and (HD2) 13.5k rear axle and (GR4) 13.5k rear suspension. (3) (FTA) 7k front axle and (FK6) 7k front suspension and (FN1) 10k rear axle or (GL4) 11k rear axle and (GR3) 11k rear suspension or (G40) 12k rear air suspension. (4) (FTA) 7k front axle and (FK6) 7k front suspension and (HD1) 15k rear axle or (J27) 15.5k rear axle and one of the following rear suspensions: (GR4) 13.5k rear suspension, (FU7) 15.5k rear suspension, (GP1) 13.5K rear air suspension, (GP8) 15.5k rear air suspension, (91B) 13.5k LiquidSpring prep single volume rear suspension, (91C) 13.5k LiquidSpring prep stacked volume rear suspension, (91D) 15.5k LiquidSpring prep single volume rear suspension or (91E) 15.5k LiquidSpring prep stacked volume rear suspension.)	$0.00	$0.00

This document contains information considered Confidential between GM and its Clients uniquely. The information provided is not intended for public disclosure. Prices, specifications, and availability are subject to change without notice, and do not include certain fees, taxes and charges that may be required by law or vary by manufacturer or region. Performance figures are guidelines only, and actual performance may vary. Photos may not represent actual vehicles or exact configurations. Content based on report preparer's input is subject to the accuracy of the input provided.
Data Version: 28141. Data Updated: Apr 2, 2026 1:49:00 AM UTC.

Vehicle: [Fleet] 2026 Chevrolet Silverado MD (CC56403) 2WD Reg Cab WT (✔ Complete)

GVWR

CODE	DESCRIPTION	MSRP	Invoice
C7R	GVWR, 16,500 lbs. (7484 kg) (Silverado 4500 HD Regular Cab 2WD models require one of the following combinations: (1) (FTC) 6.25k front axle and (FTW) 6.25k front suspension and (GL4) 11k rear axle and (GR3) 11k rear suspension. (2) (FTC) 6.25k front axle and (FTW) 6.25k front suspension and (HD2) 13.5k rear axle and (GR4) 13.5k rear suspension. (3) (FTA) 7k front axle and (FK6) 7k front suspension and (FN1) 10k rear axle or (GL4) 11k rear axle and (GR3) 11k rear suspension or (G40) 12K Rear air suspension. (4) (FTA) 7k front axle and (FK6) 7k front suspension and (HD1) 15k rear axle or (J27) 15.5k rear axle and one of the following rear suspensions: (GR4) 13.5k rear suspension, (FU7) 15.5k rear suspension, (GP1) 13.5K rear air suspension, (GP8) 15.5k rear air suspension, (91B) 13.5k LiquidSpring prep single volume rear suspension, (91C) 13.5k LiquidSpring prep stacked volume rear suspension, (91D) 15.5k LiquidSpring prep single volume rear suspension or (91E) 15.5k LiquidSpring prep stacked volume rear suspension.) (STD)	$0.00	$0.00
C7Y	GVWR, 14,001 lbs. (6350 kg) (Silverado 4500 HD Regular Cab 2WD models require one of the following combinations: (1) (FTC) 6.25k front axle and (FTW) 6.25k front suspension and (FN1) 10k rear axle or (GL4) 11k rear axle and (GR3) 11k rear suspension. (2) (FTC) 6.25k front axle and (FTW) 6.25k front suspension and (HD2) 13.5k rear axle and (GR4) 13.5k rear suspension. (3) (FTA) 7k front axle and (FK6) 7k front suspension and (FN1) 10k rear axle or (GL4) 11k rear axle and (GR3) 11k rear suspension or (G40) 12k rear air suspension. (4) (FTA) 7k front axle and (FK6) 7k front suspension and (HD1) 15k rear axle or (J27) 15.5k rear axle and one of the following rear suspensions: (GR4) 13.5k rear suspension, (FU7) 15.5k rear suspension, (GP1) 13.5K rear air suspension, (GP8) 15.5k rear air suspension, (91B) 13.5k LiquidSpring prep single volume rear suspension, (91C) 13.5k LiquidSpring prep stacked volume rear suspension, (91D) 15.5k LiquidSpring prep single volume rear suspension or (91E) 15.5k LiquidSpring prep stacked volume rear suspension.)	$0.00	$0.00
C9U	GVWR, 22,940 lbs. (10,405 kg) (Silverado 6500 HD 2WD models require the following combination: (FTL) 8k front axle and (FSN) 8k front suspension and (HD1) 15k rear axle or (J27) 15.5k rear axle and one of the following rear suspensions: (FU7) 15.5k rear suspension, (GP8) 15.5k rear air suspension, (91D) 15.5k LiquidSpring prep single volume rear suspension or (91E) 15.5k LiquidSpring prep stacked volume rear suspension.)	$5,850.00	$5,323.50
DD7	GVWR, 23,500 lbs. (10,659 kg) (Silverado 6500 HD 2WD models require the following combination: Requires H Rated Continental front and rear tires. (FTL) 8k front axle and (FSN) 8k front suspension and (J27) 15.5k rear axle and one of the following rear suspensions: (FU7) 15.5k rear suspension, (GP8) 15.5k rear air suspension, (91D) 15.5k LiquidSpring prep single volume rear suspension or (91E) 15.5k LiquidSpring prep stacked volume rear suspension.)	$6,450.00	$5,869.50

This document contains information considered Confidential between GM and its Clients uniquely. The information provided is not intended for public disclosure. Prices, specifications, and availability are subject to change without notice, and do not include certain fees, taxes and charges that may be required by law or vary by manufacturer or region. Performance figures are guidelines only, and actual performance may vary. Photos may not represent actual vehicles or exact configurations. Content based on report preparer's input is subject to the accuracy of the input provided.
Data Version: 28141. Data Updated: Apr 2, 2026 1:49:00 AM UTC.

Vehicle: [Fleet] 2026 Chevrolet Silverado MD (CC56403) 2WD Reg Cab WT (Complete)

GVWR

CODE	DESCRIPTION	MSRP	Invoice
GZG	GVWR, 19,500 lbs. (8845 kg) (Silverado 5500 HD Regular Cab 2WD models require one of the following combinations: (1) (FTC) 6.25k front axle and (FTW) 6.25k front suspension and (HD2) 13.5k rear axle and (GR4) 13.5k rear suspension. (2) (FTA) 7k front axle and (FK6) 7k front suspension and (HD2) 13.5k rear axle and one of the following rear suspensions: (GR4) 13.5k rear suspension, (GP1) 13.5k Rear air suspension, (91B) 13.5k LiquidSpring prep single volume rear suspension or (91C) 13.5k LiquidSpring prep stacked volume rear suspension. (3) (FTA) 7k front axle and (FK6) 7k front suspension and (HD1) 15k rear axle or (J27) 15.5k rear axle and one of the following rear suspensions: (GR4) 13.5k rear suspension, (FU7) 15.5k rear suspension, (GP1) 13.5K rear air suspension, (GP8) 15.5k rear air suspension, (91B) 13.5k LiquidSpring prep single volume rear suspension, (91C) 13.5k LiquidSpring prep stacked volume rear suspension, (91D) 15.5k LiquidSpring prep single volume rear suspension or (91E) 15.5k LiquidSpring prep stacked volume rear suspension. (4) (FTL) 8k front axle and (FSN) 8k front suspension and (HD2) 13.5k rear axle and one of the following rear suspensions: (GR4) 13.5k rear suspension, (G40) 12k rear air suspension, (GP1) 13.5k Rear air suspension, (91B) 13.5k LiquidSpring prep single volume rear suspension or (91C) 13.5k LiquidSpring prep stacked volume rear suspension. (5) (FTL) 8k front axle and (FSN) 8k front suspension and (HD1) 15k rear axle or (J27) 15.5k rear axle and one of the following rear suspensions: (GR4) 13.5k rear suspension, (FU7) 15.5k rear suspension, (GP1) 13.5K rear air suspension, (GP8) 15.5k rear air suspension, (91B) 13.5k LiquidSpring prep single volume rear suspension, (91C) 13.5k LiquidSpring prep stacked volume rear suspension, (91D) 15.5k LiquidSpring prep single volume rear suspension or (91E) 15.5k LiquidSpring prep stacked volume rear suspension.)	Inc.	Inc.
GZH	GVWR, 21,500 lbs. (9752 kg) (Silverado 6500 HD 2WD models require one of the following combinations: (1) (FTA) 7k front axle and (FK6) 7k front suspension and (HD1) 15k rear axle or (J27) 15.5k rear axle and one of the following rear suspensions: (FU7) 15.5k rear suspension, (GP8) 15.5k rear air suspension, (91D) 15.5k LiquidSpring prep single volume rear suspension or (91E) 15.5k LiquidSpring prep stacked volume rear suspension. (2) (FTL) 8k front axle and (FSN) 8k front suspension and (HD2) 13.5k rear axle and one of the following rear suspensions: (GR4) 13.5k rear suspension, (GP1) 13.5k Rear air suspension, (91B) 13.5k LiquidSpring prep single volume rear suspension or (91C) 13.5k LiquidSpring prep stacked volume rear suspension. (3) (FTL) 8k front axle and (FSN) 8k front suspension and (HD1) 15k rear axle or (J27) 15.5k rear axle and one of the following rear suspensions: (GR4) 13.5k rear suspension, (FU7) 15.5k rear suspension, (GP1) 13.5K rear air suspension, (GP8) 15.5k rear air suspension, (91B) 13.5k LiquidSpring prep single volume rear suspension, (91C) 13.5k LiquidSpring prep stacked volume rear suspension, (91D) 15.5k LiquidSpring prep single volume rear suspension or (91E) 15.5k LiquidSpring prep stacked volume rear suspension.)	$4,300.00	$3,913.00

This document contains information considered Confidential between GM and its Clients uniquely. The information provided is not intended for public disclosure. Prices, specifications, and availability are subject to change without notice, and do not include certain fees, taxes and charges that may be required by law or vary by manufacturer or region. Performance figures are guidelines only, and actual performance may vary. Photos may not represent actual vehicles or exact configurations. Content based on report preparer's input is subject to the accuracy of the input provided.
Data Version: 28141. Data Updated: Apr 2, 2026 1:49:00 AM UTC.

Vehicle: [Fleet] 2026 Chevrolet Silverado MD (CC56403) 2WD Reg Cab WT (✔ Complete)

GVWR

CODE	DESCRIPTION	MSRP	Invoice
GZJ	GVWR, 18,000 lbs. (8165 kg) (Silverado 5500 HD Regular Cab 2WD models require one of the following combinations: (1) (FTC) 6.25k front axle and (FTW) 6.25k front suspension and (HD2) 13.5k rear axle and (GR4) 13.5k rear suspension. (2) (FTA) 7k front axle and (FK6) 7k front suspension and (GL4) 11k rear axle and (GR3) 11k rear suspension or (G40) 12k Rear air suspension. (3) (FTA) 7k front axle and (FK6) 7k front suspension and (HD2) 13.5k rear axle and one of the following rear suspensions: (GR4) 13.5k rear suspension, (G40) 12k Rear air suspension, (GP1) 13.5k Rear air suspension, (91B) 13.5k LiquidSpring prep single volume rear suspension or (91C) 13.5k LiquidSpring prep stacked volume rear suspension. (4) (FTA) 7k front axle and (FK6) 7k front suspension and (HD1) 15k rear axle or (J27) 15.5k rear axle and one of the following rear suspensions: (GR4) 13.5k rear suspension, (FU7) 15.5k rear suspension, (GP1) 13.5K rear air suspension, (GP8) 15.5k rear air suspension, (91B) 13.5k LiquidSpring prep single volume rear suspension, (91C) 13.5k LiquidSpring prep stacked volume rear suspension, (91D) 15.5k LiquidSpring prep single volume rear suspension or (91E) 15.5k LiquidSpring prep stacked volume rear suspension.)	$1,100.00	$1,001.00
GZX	GVWR, 17,500 lbs. (7938 kg) (Silverado 5500 HD Regular Cab 2WD models require one of the following combinations: (1) (FTC) 6.25k front axle and (FTW) 6.25k front suspension and (HD2) 13.5k rear axle and (GR4) 13.5k rear suspension. (2) (FTA) 7k front axle and (FK6) 7k front suspension and (GL4) 11k rear axle and (GR3) 11k rear suspension or (G40) 12k Rear air suspension. (3) (FTA) 7k front axle and (FK6) 7k front suspension and (HD2) 13.5k rear axle and one of the following rear suspensions: (GR4) 13.5k rear suspension, (G40) 12k Rear air suspension, (GP1) 13.5k Rear air suspension, (91B) 13.5k LiquidSpring prep single volume rear suspension or (91C) 13.5k LiquidSpring prep stacked volume rear suspension. (4) (FTA) 7k front axle and (FK6) 7k front suspension and (HD1) 15k rear axle or (J27) 15.5k rear axle and one of the following rear suspensions: (GR4) 13.5k rear suspension, (FU7) 15.5k rear suspension, (GP1) 13.5K rear air suspension, (GP8) 15.5k rear air suspension, (91B) 13.5k LiquidSpring prep single volume rear suspension, (91C) 13.5k LiquidSpring prep stacked volume rear suspension, (91D) 15.5k LiquidSpring prep single volume rear suspension or (91E) 15.5k LiquidSpring prep stacked volume rear suspension.)	$1,100.00	$1,001.00

REQUIRED OPTION

CODE	DESCRIPTION	MSRP	Invoice
R6C	37,500 lbs. GCWR (17,009 kg) (Requires 37,500 GCWR transmission (MBV, MBW, MBX, MBY, ME0, MHV, MI0 or MJ0). Requires (008) Rear axle, 4.88 ratio, and (HD1) 15k rear axle or (J27) 15.5k rear axle.)	$0.00	$0.00
R6G	26,000 lbs. GCWR (11,793 kg) (Requires 26k GCWR transmission (MWA, MWB, MIU, MIA, MH1, MG0, MIX, MF0, MA6 or MB6).)	Inc.	Inc.
R6I	30,000 lbs. GCWR (13,607 kg) (Requires 30k GCWR transmission (MBV, MBW, MBX, MBY, MJ0, MI0, MHV, ME0).)	$0.00	$0.00
R6W	34,000 lbs. GCWR (15,422 kg) (Requires 34k GCWR transmission (MBV, MBW, MBX, MBY, ME0, MHV, MI0 or MJ0). Requires (092) Rear axle, 4.30 ratio, and (HD1) 15k rear axle or (J27) 15.5k rear axle.)	$0.00	$0.00
R6X	35,000 lbs. GCWR (15,875 kg) (Requires 35k GCWR transmission (MBV, MBW, MBX, MBY, ME0, MHV, MI0 or MJ0). Requires (005) Rear axle, 4.56 ratio, and (HD1) 15k rear axle or (J27) 15.5k rear axle.)	$0.00	$0.00

This document contains information considered Confidential between GM and its Clients uniquely. The information provided is not intended for public disclosure. Prices, specifications, and availability are subject to change without notice, and do not include certain fees, taxes and charges that may be required by law or vary by manufacturer or region. Performance figures are guidelines only, and actual performance may vary. Photos may not represent actual vehicles or exact configurations. Content based on report preparer's input is subject to the accuracy of the input provided.
Data Version: 28141. Data Updated: Apr 2, 2026 1:49:00 AM UTC.

Vehicle: [Fleet] 2026 Chevrolet Silverado MD (CC56403) 2WD Reg Cab WT (✔ Complete)

ENGINE

CODE	DESCRIPTION	MSRP	Invoice
L5D	Engine, Duramax 6.6L Turbo-Diesel V8, B20-Diesel compatible 350 hp @ 2500 rpm, 750 lb.-ft. torque @ 1400 rpm (STD)	$0.00	$0.00

POWER TAKE OFF

CODE	DESCRIPTION	MSRP	Invoice
PTO	Power Take Off, engine control provisions Access is available on left-hand and right-hand side	Inc.	Inc.
PTX	Power Take-Off (PTO), not installed	$0.00	$0.00

TRANSMISSION

CODE	DESCRIPTION	MSRP	Invoice
MA6	Non-Conforming School Bus / Shuttle Bus Transmission, Automatic close-ratio 6 SPD with double overdrive, Allison, A1700PTS ratios: 3.10 1ST, 1.80 2ND, 1.40 3RD, 1.00 4TH, 0.70 5TH, 0.61 6TH, 26,001 GCW Max., requires PTX and park pawl. Available with GVWs less than or equal to 19.5K (Requires (C7Y) 14,001 lbs. GVWR, (C5B) 15,000 lbs. GVWR, (C7P) 16,000 lbs. GVWR, (C7R) 16,500 lbs. GVWR, (GZX) 17,500 lbs. GVWR, (GZJ) 18,000 lbs. GVWR or (GZG) 19,500 lbs. GVWR. Requires (ANK) Non-Conforming School Bus Package or (ANC) Shuttle Bus Package and (R6G) 26,000 lbs. GCWR (11,793 kg).)	$400.00	$364.00
MB6	Non-Conforming School Bus / Shuttle Bus Transmission, Automatic close-ratio 6 SPD with double overdrive, Allison, A2700PTS ratios: 3.10 1ST, 1.80 2ND, 1.40 3RD, 1.00 4TH, 0.70 5TH, 0.61 6TH, 26,001K GCW Max., requires PTX and park pawl. Available with GVWs greater than 19.5K (Requires (GZH) 21,500 lbs. GVWR, (C9U) 22,940 lbs. GVWR or (DD7) 23,500 lbs. GVWR and (R6G) 26,000 lbs. GCWR (11,793 kg). Requires (ANK) Non-Conforming School Bus Package or (ANC) Shuttle Bus Package.)	$1,385.00	$1,260.35
MBV	Rugged Duty Service Transmission, Automatic close-ratio 6 SPD with double overdrive, Allison, A2750RDS ratios: 3.10 1ST, 1.80 2ND, 1.40 3RD, 1.00 4TH, 0.70 5TH, 0.61 6TH Rugged Duty Series, 26K GVW & 37.5K GCW Max., requires PTO, includes park pawl, On/Off Highway. Available with GVWs greater than 19.5K (Requires (GZH) 21,500 lbs. GVWR, (C9U) 22,940 lbs. GVWR or (DD7) 23,500 lbs. GVWR and (PTO) Power Take Off, engine control provisions and (R6I) 30,000 lbs. GCWR (13,607 kg), (R6W) 34,000 lbs. GCWR (15,422 kg), (R6X) 35,000 lbs. GCWR (15,875 kg) or (R6C) 37,500 lbs. GCWR (17,009 kg).)	$1,585.00	$1,442.35
MBW	Motor Home Transmission, Automatic close-ratio 6 SPD with double overdrive, Allison, A2750MH ratios: 3.10 1ST, 1.80 2ND, 1.40 3RD, 1.00 4TH, 0.70 5TH, 0.61 6TH Motorhome Series, 26K GVW & 37.5K GCW Max. Close-ratio with double overdrive. Requires PTO and includes park pawl. Available with GVWs greater than 22k (Requires (C9U) 22,940 lbs. (10,405 kg) GVWR, or (DD7) 23,500 lbs. GVWR and (PCH) Motorhome Package and (PTO) Power Take Off, engine control provisions and (R6I) 30,000 lbs. GCWR (13,607 kg), (R6W) 34,000 lbs. GCWR (15,422 kg), (R6X) 35,000 lbs. GCWR (15,875 kg) or (R6C) 37,500 lbs. GCWR (17,009 kg).)	$2,665.00	$2,425.15

This document contains information considered Confidential between GM and its Clients uniquely. The information provided is not intended for public disclosure. Prices, specifications, and availability are subject to change without notice, and do not include certain fees, taxes and charges that may be required by law or vary by manufacturer or region. Performance figures are guidelines only, and actual performance may vary. Photos may not represent actual vehicles or exact configurations. Content based on report preparer's input is subject to the accuracy of the input provided.
Data Version: 28141. Data Updated: Apr 2, 2026 1:49:00 AM UTC.

Vehicle: [Fleet] 2026 Chevrolet Silverado MD (CC56403) 2WD Reg Cab WT (Complete)

TRANSMISSION

CODE	DESCRIPTION	MSRP	Invoice
MBX	Highway Service Transmission Automatic close-ratio 6 SPD with double overdrive, Allison, A2750HS ratios: 3.10 1ST, 1.80 2ND, 1.40 3RD, 1.00 4TH, 0.70 5TH, 0.61 6TH Highway Series, 26K GVW & 37.5K GCW Max., requires PTX. Includes park pawl. Available with GVWs greater than 19.5K (Requires (GZH) 21,500 lbs. GVWR, (C9U) 22,940 lbs. GVWR or (DD7) 23,500 lbs. GVWR and (PTX) Power Take-Off (PTO), not installed and (R6I) 30,000 lbs. GCWR (13,607 kg), (R6W) 34,000 lbs. GCWR (15,422 kg), (R6X) 35,000 lbs. GCWR (15,875 kg) or (R6C) 37,500 lbs. GCWR (17,009 kg).)	$1,435.00	$1,305.85
MBY	Emergency Service Transmission, Automatic close-ratio 6 SPD with double overdrive, Allison, A2750EVS ratios: 3.10 1ST, 1.80 2ND, 1.40 3RD, 1.00 4TH, 0.70 5TH, 0.61 6TH Emergency Vehicle Series, 26K GVW & 37.5K GCW Max. Close-ratio with double overdrive. Requires PTO and includes park pawl. Available with GVWs greater than 19.5K (Requires (GZH) 21,500 lbs. GVWR, (C9U) 22,940 lbs. GVWR or (DD7) 23,500 lbs. GVWR and (YF2) Emergency Service Package and (PTO) Power Take Off, engine control provisions and (R6I) 30,000 lbs. GCWR (13,607 kg), (R6W) 34,000 lbs. GCWR (15,422 kg), (R6X) 35,000 lbs. GCWR (15,875 kg) or (R6C) 37,500 lbs. GCWR (17,009 kg).)	$1,845.00	$1,678.95
ME0	Motor Home Transmission, Automatic close-ratio 6 SPD with double overdrive, Allison, A1750MH ratios: 3.10 1ST, 1.80 2ND, 1.40 3RD, 1.00 4TH, 0.70 5TH, 0.61 6TH Motorhome Series, 22K GVW & 37.5K GCW Max., requires PTO and park pawl. Available with GVWs less than or equal to 22K (Requires (C7Y) 14,001 lbs. GVWR, (C5B) 15,000 lbs. GVWR, (C7P) 16,000 lbs. GVWR, (C7R) 16,500 lbs. GVWR, (GZX) 17,500 lbs. GVWR, (GZJ) 18,000 lbs. GVWR, (GZG) 19,500 lbs. GVWR or (GZH) 21,500 lb. GVWR. Requires (PCH) Motorhome Package and (R6I) 30,000 lbs. GCWR (13,607 kg), (R6W) 34,000 lbs. GCWR (15,422 kg), (R6X) 35,000 lbs. GCWR (15,875 kg) or (R6C) 37,500 lbs. GCWR (17,009 kg). Requires (R6I) 30,000 lbs. GCWR when ordered with (066) 4.10 rear axle ratio.)	$1,820.00	$1,656.20
MF0	Motor Home Transmission, Automatic close-ratio 6 SPD with double overdrive, Allison, A2700MH ratios: 3.10 1ST, 1.80 2ND, 1.40 3RD, 1.00 4TH, 0.70 5TH, 0.61 6TH Motorhome Series, 26K GVW & 26,001K GCW Max., requires PTO and park pawl. Available with GVWs greater than 22K (Requires (C9U) 22,940 lbs. GVWR or (DD7) 23,500 lbs. GVWR and (PCH) Motorhome Package and (PTO) Power Take Off, engine control provisions and (R6G) 26,000 lbs. GCWR (11,793 kg).)	$2,215.00	$2,015.65
MG0	Emergency Service Transmission, Automatic close-ratio 6 SPD with double overdrive, Allison, A2700EVS ratios: 3.10 1ST, 1.80 2ND, 1.40 3RD, 1.00 4TH, 0.70 5TH, 0.61 6TH, Emergency Vehicle Series, 26K GVW & 26K GCW Max., requires PTO and park pawl. Available with GVWs greater than 19.5K (Requires (GZH) 21,500 lbs. GVWR, (C9U) 22,940 lbs. GVWR or (DD7) 23,500 lbs. GVWR. Requires (YF2) Emergency Service Package and (R6G) 26,000 lbs. GCWR (11,793 kg).)	$1,395.00	$1,269.45
MH1	Emergency Service Transmission, Automatic close-ratio 6 SPD with double overdrive, Allison, A1700EVS ratios: 3.10 1ST, 1.80 2ND, 1.40 3RD, 1.00 4TH, 0.70 5TH, 0.61 6TH Emergency Vehicle Series, 19.5K GVW & 26K GCW Max., requires PTO and park pawl. Available with GVWs less than or equal to 19.5K (Requires (C7Y) 14,001 lbs. GVWR, (C5B) 15,000 lbs. GVWR, (C7P) 16,000 lbs. GVWR, (C7R) 16,500 lbs. GVWR, (GZX) 17,500 lbs. GVWR, (GZJ) 18,000 lbs. GVWR or (GZG) 19,500 lbs. GVWR. Requires (YF2) Emergency Service Package and (R6G) 26,000 lbs. GCWR (11,793 kg).)	$530.00	$482.30

This document contains information considered Confidential between GM and its Clients uniquely. The information provided is not intended for public disclosure. Prices, specifications, and availability are subject to change without notice, and do not include certain fees, taxes and charges that may be required by law or vary by manufacturer or region. Performance figures are guidelines only, and actual performance may vary. Photos may not represent actual vehicles or exact configurations. Content based on report preparer's input is subject to the accuracy of the input provided.
Data Version: 28141. Data Updated: Apr 2, 2026 1:49:00 AM UTC.

Vehicle: [Fleet] 2026 Chevrolet Silverado MD (CC56403) 2WD Reg Cab WT (✔ Complete)

TRANSMISSION

CODE	DESCRIPTION	MSRP	Invoice
MHV	Emergency Service Transmission, Automatic close-ratio 6 SPD with double overdrive, Allison, A1750EVS ratios: 3.10 1ST, 1.80 2ND, 1.40 3RD, 1.00 4TH, 0.70 5TH, 0.61 6TH Emergency Vehicle Series, 19.5K GVW & 37.5K GCW Max., requires PTO and park pawl. Available with GVWs less than or equal to 19.5K (Requires (C7Y) 14,001 lbs. GVWR, (C5B) 15,000 lbs. GVWR, (C7P) 16,000 lbs. GVWR, (C7R) 16,500 lbs. GVWR, (GZX) 17,500 lbs. GVWR, (GZJ) 18,000 lbs. GVWR or (GZG) 19,500 lbs. GVWR. Requires (YF2) Emergency Service Package and (R6I) 30,000 lbs. GCWR (13,607 kg), (R6W) 34,000 lbs. GCWR (15,422 kg), (R6X) 35,000 lbs. GCWR (15,875 kg) or (R6C) 37,500 lbs. GCWR (17,009 kg). Requires (R6I) 30,000 lbs. GCWR when ordered with (066) 4.10 rear axle ratio.)	$1,000.00	$910.00
MI0	Rugged Duty Service Transmission, Automatic close-ratio 6 SPD with double overdrive, Allison, A1750RDS ratios 3.10 1ST, 1.80 2ND, 1.40 3RD, 1.00 4TH, 0.70 5TH, 0.61 Rugged Duty Series, 19.5K GVW & 37.5K GCW Max., requires PTO and park pawl, On/Off Highway. Available with GVWs less than or equal to 19.5K (Requires (C7Y) 14,001 lbs. GVWR, (C5B) 15,000 lbs. GVWR, (C7P) 16,000 lbs. GVWR, (C7R) 16,500 lbs. GVWR, (GZX) 17,500 lbs. GVWR, (GZJ) 18,000 lbs. GVWR or (GZG) 19,500 lbs. GVWR. Requires (R6I) 30,000 lbs. GCWR (13,607 kg), (R6W) 34,000 lbs. GCWR (15,422 kg), (R6X) 35,000 lbs. GCWR (15,875 kg) or (R6C) 37,500 lbs. GCWR (17,009 kg). Requires (R6I) 30,000 lbs. GCWR when ordered with (066) 4.10 rear axle ratio.)	$740.00	$673.40
MIA	Rugged Duty Service Transmission, Automatic close-ratio 6 SPD with double overdrive, Allison, A2700RDS ratios: 3.10 1ST, 1.80 2ND, 1.40 3RD, 1.00 4TH, 0.70 5TH, 0.61 6TH Rugged Duty Series, 26K GVW & 26K GCW Max., requires PTO and park pawl, On/Off Highway. Available with GVWs greater than 19.5K (Requires (GZH) 21,500 lbs. GVWR, (C9U) 22,940 lbs. GVWR or (DD7) 23,500 lbs. GVWR. Requires (R6G) 26,000 lbs. GCWR (11,793 kg).)	$1,135.00	$1,032.85
MIU	Rugged Duty Service Transmission, Automatic close-ratio 6 SPD with double overdrive, Allison, A1700RDS ratios: 3.10 1ST, 1.80 2ND, 1.40 3RD, 1.00 4TH, 0.70 5TH, 0.61 6TH Rugged Duty Series, 19.5K GVW & 26K GCW Max., requires PTO and park pawl, On/Off Highway. Available with GVWs less than or equal to 19.5K (Requires (C7Y) 14,001 lbs. GVWR, (C5B) 15,000 lbs. GVWR, (C7P) 16,000 lbs. GVWR, (C7R) 16,500 lbs. GVWR, (GZX) 17,500 lbs. GVWR, (GZJ) 18,000 lbs. GVWR or (GZG) 19,500 lbs. GVWR. Requires (R6G) 26,000 lbs. GCWR (11,793 kg).)	$290.00	$263.90
MIX	Motor Home Transmission, Automatic close-ratio 6 SPD with double overdrive, Allison, A1700MH ratios: 3.10 1ST, 1.80 2ND, 1.40 3RD, 1.00 4TH, 0.70 5TH, 0.61 6TH Motorhome Series, 22K GVW & 26,001 GCW Max., requires PTO and park pawl. Available with GVWs less than or equal to 22K (Requires (C7Y) 14,001 lbs. GVWR, (C5B) 15,000 lbs. GVWR, (C7P) 16,000 lbs. GVWR, (C7R) 16,500 lbs. GVWR, (GZX) 17,500 lbs. GVWR, (GZJ) 18,000 lbs. GVWR, (GZG) 19,500 lbs. GVWR or (GZH) 21,500 lb. GVWR. Requires (PCH) Motorhome Package and (R6G) 26,000 lbs. GCWR (11,793 kg).)	$1,350.00	$1,228.50

This document contains information considered Confidential between GM and its Clients uniquely. The information provided is not intended for public disclosure. Prices, specifications, and availability are subject to change without notice, and do not include certain fees, taxes and charges that may be required by law or vary by manufacturer or region. Performance figures are guidelines only, and actual performance may vary. Photos may not represent actual vehicles or exact configurations. Content based on report preparer's input is subject to the accuracy of the input provided.
Data Version: 28141. Data Updated: Apr 2, 2026 1:49:00 AM UTC.

Vehicle: [Fleet] 2026 Chevrolet Silverado MD (CC56403) 2WD Reg Cab WT (Complete)

TRANSMISSION

CODE	DESCRIPTION	MSRP	Invoice
MJ0	Highway Service Transmission, Automatic close-ratio 6 SPD with double overdrive, Allison, A1750HS ratios: 3.10 1ST, 1.80 2ND, 1.40 3RD, 1.00 4TH, 0.70 5TH, 0.61 6TH Highway Series, 19.5K GVW & 37.5K GCW Max., requires PTX and park pawl. Available with GVWs less than or equal to 19.5K (Requires (C7Y) 14,001 lbs. GVWR, (C5B) 15,000 lbs. GVWR, (C7P) 16,000 lbs. GVWR, (C7R) 16,500 lbs. GVWR, (GZX) 17,500 lbs. GVWR, (GZJ) 18,000 lbs. GVWR or (GZG) 19,500 lbs. GVWR. Requires (R6I) 30,000 lbs. GCWR (13,607 kg), (R6W) 34,000 lbs. GCWR (15,422 kg), (R6X) 35,000 lbs. GCWR (15,875 kg) or (R6C) 37,500 lbs. GCWR (17,009 kg). Requires (R6I) 30,000 lbs. GCWR when ordered with (066) 4.10 rear axle ratio.)	$550.00	$500.50
MWA	Highway Service Transmission, Automatic close-ratio 6 SPD with double overdrive, Allison, A1700HS ratios: 3.10 1ST, 1.80 2ND, 1.40 3RD, 1.00 4TH, 0.70 5TH, 0.61 6TH Highway Series, 19.5K GVW & 26K GCW Max., requires PTX and park pawl. Available with GVWs less than or equal to 19.5K (Requires (C7Y) 14,001 lbs. GVWR, (C5B) 15,000 lbs. GVWR, (C7P) 16,000 lbs. GVWR, (C7R) 16,500 lbs. GVWR, (GZX) 17,500 lbs. GVWR, (GZJ) 18,000 lbs. GVWR or (GZG) 19,500 lbs. GVWR. Requires (R6G) 26,000 lb. GCWR (11,793 kg).) (STD)	$0.00	$0.00
MWB	Highway Service Transmission, Automatic close-ratio 6 SPD with double overdrive, Allison, A2700HS ratios: 3.10 1ST, 1.80 2ND, 1.40 3RD, 1.00 4TH, 0.70 5TH, 0.61 6TH Highway Series, 26K GVW & 26K GCW Max., requires PTX and park pawl. Available with GVWs greater than 19.5K (Requires (GZH) 21,500 lbs. GVWR, (C9U) 22,940 lbs. GVWR or (DD7) 23,500 lbs. GVWR. Requires (R6G) 26,000 lbs. GCWR (11,793 kg).)	$985.00	$896.35

AXLE

CODE	DESCRIPTION	MSRP	Invoice
005	Rear axle, 4.56 ratio Max road speed: 75 MPH	$0.00	$0.00
008	Rear axle, 4.88 ratio Max road speed: 70 MPH	$0.00	$0.00
013	Rear axle, 3.73 ratio Max road speed: 85 MPH	$0.00	$0.00
066	Rear axle, 4.10 ratio Max road speed: 79 MPH	$0.00	$0.00
092	Rear axle, 4.30 ratio Max road speed: 79 MPH	$0.00	$0.00

FRONT AXLE

CODE	DESCRIPTION	MSRP	Invoice
FTA	Front axle, 7,000 lbs, Dana Spicer D800-N, "I"-beam, non-driving (Requires (FK6) 7,000 lb. (3,175 kg) front suspension.)	Inc.	Inc.
FTC	Front axle, 6,250 lb. (2,835 kg), Dana Spicer D800-N, "I"-beam, non-driving (Requires (FTW) 6,250 lb. front suspension. Includes (G68) rear shock absorbers. Not available with rear air suspensions.)	$0.00	$0.00
FTL	Front axle, 8,000 lbs, Dana/Spicer D800-N, "I"-beam, non-driving (Requires (FSN) 8,000 lbs. (3,629 kg) front suspension.)	$500.00	$455.00

This document contains information considered Confidential between GM and its Clients uniquely. The information provided is not intended for public disclosure. Prices, specifications, and availability are subject to change without notice, and do not include certain fees, taxes and charges that may be required by law or vary by manufacturer or region. Performance figures are guidelines only, and actual performance may vary. Photos may not represent actual vehicles or exact configurations. Content based on report preparer's input is subject to the accuracy of the input provided.
Data Version: 28141. Data Updated: Apr 2, 2026 1:49:00 AM UTC.

Vehicle: [Fleet] 2026 Chevrolet Silverado MD (CC56403) 2WD Reg Cab WT (✔ Complete)

FRONT SUSPENSION

CODE	DESCRIPTION	MSRP	Invoice
FK6	Front suspension, 7,000 lbs. (3,175 kg) multi-leaf, includes shock absorbers	$0.00	$0.00
FSN	Front suspension, 8,000 lbs. (3,629 kg) multi-leaf, includes shock absorbers	$100.00	$91.00
FTW	Front suspension, 6,250 lbs. (2,835 kg) multi-leaf, includes shock absorbers (Not available with LiquidSpring prep or rear air suspensions.) (STD)	$0.00	$0.00

REAR AXLE

CODE	DESCRIPTION	MSRP	Invoice
FN1	Rear axle, 10,000 lb. (4,536 kg)	$0.00	$0.00
GL4	Rear axle, 11,000 lb. (4,999 kg)	$0.00	$0.00
HD1	Rear axle, 15,000 lb. (6,804 kg)	Inc.	Inc.
HD2	Rear axle, 13,500 lb. (6,124 kg)	$355.00	$323.05
J27	Rear axle, 15,500 lb. (7,031 kg) (Note: 15,500 lb. rear axle capacity can be reduced by rear tire capacity or rear suspension. Maximum axle capacity will not be higher than the rear tire or rear suspension capacity selected for vehicle.)	$775.00	$705.25

REAR SUSPENSION

CODE	DESCRIPTION	MSRP	Invoice
91B	Rear suspension, LiquidSpring Prep, Single Volume (Incomplete), 13,500 lbs. (6,123 kg) This option requires an additional charge and purchase order between the dealer, upfitter or customer and TSC to complete installation of this option. (Not available with (G80) heavy-duty locking rear differential. Requires (ER2) 189" wheelbase or (ED5) 201" wheelbase, (5DX) Electrical Provisions, rear of cab, or (5DY) Electrical Provisions, rear of cab, (UZF) Back-up alarm, (WU2) TSC Ship-Thru (with purchase order) and one of the following combinations: (1) (F0C) Axle to end of frame 49", (N12) straight exhaust system that terminates ahead of rear wheels or (NPK) right side exit exhaust ahead of rear wheels and (NVK) 25-gal fuel tank. (2) (F0D) Axle to end of frame 63", (N12) straight exhaust system that terminates ahead of rear wheels or (NPK) right side exit exhaust ahead of rear wheels. (3) (F0I) Axle to end of frame 75", (N12) straight exhaust system that terminates ahead of rear wheels or (NPK) right side exit exhaust ahead of rear wheels.)	$0.00	$0.00
91C	Rear suspension, LiquidSpring Prep, Stacked Volume (Incomplete), 13,500 lbs. (6,123 kg) This option requires an additional charge and purchase order between the dealer, upfitter or customer and TSC to complete installation of this option. (Not available with (G80) heavy-duty locking rear differential. Requires (ER2) 189" wheelbase or (ED5) 201" wheelbase, (5DX) Electrical Provisions, rear of cab, or (5DY) Electrical Provisions, rear of cab, (UZF) Back-up alarm, (WU2) TSC Ship-Thru (with purchase order) and one of the following combinations: (1) (F0D) Axle to end of frame 63", and (N2L) 40-gal fuel tank. (2) (F0I) Axle to end of frame 75", and (N2L) 40-gal fuel tank.)	$0.00	$0.00

This document contains information considered Confidential between GM and its Clients uniquely. The information provided is not intended for public disclosure. Prices, specifications, and availability are subject to change without notice, and do not include certain fees, taxes and charges that may be required by law or vary by manufacturer or region. Performance figures are guidelines only, and actual performance may vary. Photos may not represent actual vehicles or exact configurations. Content based on report preparer's input is subject to the accuracy of the input provided.
Data Version: 28141. Data Updated: Apr 2, 2026 1:49:00 AM UTC.

Vehicle: [Fleet] 2026 Chevrolet Silverado MD (CC56403) 2WD Reg Cab WT (✔ Complete)

REAR SUSPENSION

CODE	DESCRIPTION	MSRP	Invoice
91D	Rear suspension, LiquidSpring Prep, Single Volume (Incomplete), 15,500 lbs. (7673 kg) This option requires an additional charge and purchase order between the dealer, upfitter or customer and TSC to complete installation of this option. (Not available with (G80) heavy-duty locking rear differential. Requires (ER2) 189" wheelbase or (ED5) 201" wheelbase, (5DX) Electrical Provisions, rear of cab, or (5DY) Electrical Provisions, rear of cab, (UZF) Back-up alarm, (WU2) TSC Ship-Thru (with purchase order) and one of the following combinations: (1) (F0C) Axle to end of frame 49", (N12) straight exhaust system that terminates ahead of rear wheels or (NPK) right side exit exhaust ahead of rear wheels and (NVK) 25-gal fuel tank. (2) (F0D) Axle to end of frame 63", (N12) straight exhaust system that terminates ahead of rear wheels or (NPK) right side exit exhaust ahead of rear wheels. (3) (F0I) Axle to end of frame 75", (N12) straight exhaust system that terminates ahead of rear wheels or (NPK) right side exit exhaust ahead of rear wheels.)	$0.00	$0.00
91E	Rear suspension, LiquidSpring Prep, Stacked Volume (Incomplete), 15,500 lbs. (7673 kg) This option requires an additional charge and purchase order between the dealer, upfitter or customer and TSC to complete installation of this option. (Not available with (G80) heavy-duty locking rear differential. Requires (ER2) 189" wheelbase or (ED5) 201" wheelbase, (5DX) Electrical Provisions, rear of cab, or (5DY) Electrical Provisions, rear of cab, (UZF) Back-up alarm, (WU2) TSC Ship-Thru (with purchase order) and one of the following combinations: (1) (F0D) Axle to end of frame 63", and (N2L) 40-gal fuel tank. (2) (F0I) Axle to end of frame 75", and (N2L) 40-gal fuel tank.)	$0.00	$0.00
FU7	Rear suspension, 15,500 lbs. (7,031 kg) multi-leaf, vari-rate (Not available with air suspension.)	Inc.	Inc.
G40	Rear suspension - Air, 12,000 lbs. (5,443 kg), 5.3" ride height with shock absorbers (Requires (KUT) Air Compressor Accessory Drive and (JPZ) Suspension air control valve or (PCM) Wrecker/Rollback Vocational Package. Not available with (ED9) 165" wheelbase.)	$200.00	$182.00
GP1	Rear suspension - Air, 13,500 lbs. (6,123 kg), 5.3" ride height with shock absorbers (Requires (KUT) Air Compressor Accessory Drive and (JPZ) Suspension air control valve or (PCM) Wrecker/Rollback Vocational Package. Not available with (ED9) 165" wheelbase.)	$475.00	$432.25
GP8	Rear suspension - Air, 15,500 lbs. (7,031 kg), 5.3" ride height with shock absorbers (Requires (KUT) Air Compressor Accessory Drive and (JPZ) Suspension air control valve or (PCM) Wrecker/Rollback Vocational Package. Not available with (ED9) 165" wheelbase.)	$775.00	$705.25
GR3	Rear suspension, 11,000 lbs. (4,990 kg) multi-leaf, vari-rate (Not available with air suspension.) (STD)	$0.00	$0.00
GR4	Rear suspension, 13,500 lbs. (6,123 kg) multi-leaf, vari-rate (Not available with air suspension or (GL4) 11,000 lb. (4,999 kg) rear axle.)	$25.00	$22.75

WHEELBASE

CODE	DESCRIPTION	MSRP	Invoice
ED5	Wheelbase, 201" (510.5 cm), 120" CA (Requires (F0C) 49" axle to end of frame, (F0D) 63" axle to end of frame or (F0I) 75" axle to end of frame. Not available with (NPR) right side exit exhaust, behind rear wheels.)	$525.00	$477.75

This document contains information considered Confidential between GM and its Clients uniquely. The information provided is not intended for public disclosure. Prices, specifications, and availability are subject to change without notice, and do not include certain fees, taxes and charges that may be required by law or vary by manufacturer or region. Performance figures are guidelines only, and actual performance may vary. Photos may not represent actual vehicles or exact configurations. Content based on report preparer's input is subject to the accuracy of the input provided.
Data Version: 28141. Data Updated: Apr 2, 2026 1:49:00 AM UTC.

Vehicle: [Fleet] 2026 Chevrolet Silverado MD (CC56403) 2WD Reg Cab WT (✓ Complete)

WHEELBASE

CODE	DESCRIPTION	MSRP	Invoice
ED9	Wheelbase, 165" (419.1 cm), 84" CA (Requires (F0C) 49" axle to end of frame, (F0D) 63" axle to end of frame or (F0K) 91" axle to end of frame and (NPR) right side exit exhaust, behind the rear wheels.) (STD)	Inc.	Inc.
EQB	Wheelbase, 219" (556.3 cm), 138" CA (Requires (F0I) 75" axle to end of frame. Not available with (NPR) right side exit exhaust, behind rear wheels.)	$700.00	$637.00
ER2	Wheelbase, 189" (480.1 cm), 108" CA (Requires (F0C) 49" axle to end of frame, (F0D) 63" axle to end of frame or (F0I) 75" axle to end of frame. Not available with (NPR) right side exit exhaust, behind rear wheels.)	$350.00	$318.50
FBC	Wheelbase, 243" (617.2 cm), 162" CA (Requires (F0G) 83" axle to end of frame dimension. Not available with (NPR) right side exit exhaust, behind rear wheels.)	$1,050.00	$955.50
FPN	Wheelbase, 231" (586.7 cm), 150" CA (Requires (F0K) 91" axle to end of frame. Not available with (NPR) right side exit exhaust, behind rear wheels.)	$875.00	$796.25

PREFERRED EQUIPMENT GROUP

CODE	DESCRIPTION	MSRP	Invoice
1WT	WT Preferred Equipment Group includes standard equipment	$0.00	$0.00

WHEELS

CODE	DESCRIPTION	MSRP	Invoice
PWG	Wheels, 19.5" x 6.75", 6-aluminum wheels, 8-holes, hub piloted Dura-Bright finish is on the outside of the wheel	$1,695.00	$1,542.45
PWQ	Wheels, 19.5" x 6.75", steel, Black painted, 8-holes, hub piloted (STD)	$0.00	$0.00
PWR	Wheels, 19.5" x 6.75", steel, Grey painted, 8-holes, hub piloted	$80.00	$72.80
PWS	Wheels, 19.5" x 6.75", steel, White painted, 8-holes, hub piloted	$80.00	$72.80
PWV	Wheels, 19.5" x 6.75", 4-aluminum wheels, 8-holes, hub piloted Dura-Bright finish is on the outside of the wheel	$1,095.00	$996.45

FRONT TIRES

CODE	DESCRIPTION	MSRP	Invoice
XBA	Tires, front 225/70R19.5G highway Goodyear Range Max Max Axle Load: 7,940 lbs. (Requires (YBA) Tires, rear 225/70R19.5G highway Goodyear Range Max, Max Axle Load: 15,000 lbs. or (YBB) Tires, rear 225/70R19.5G traction Goodyear Range Max, Max Axle Load: 15,000 lbs.)	$550.00	$500.50
XBB	Tires, front 225/70R19.5G traction Goodyear Range Max Max Axle Load: 7,940 lbs. (Requires (YBB) rear 225/70R19.5G traction Goodyear Range Max tires.)	$650.00	$591.50
XEY	Tires, front 225/70R19.5G highway blackwall Pirelli Max Axle Load: 7,940 lbs. (Requires (YEY) Tires, rear 225/70R19.5G highway blackwall Pirelli, Max Axle Load: 15,000 lbs. or (YEZ) Tires, rear 225/70R19.5G traction blackwall Pirelli, Max Axle Load: 15,000 lbs.) (STD)	Inc.	Inc.

This document contains information considered Confidential between GM and its Clients uniquely. The information provided is not intended for public disclosure. Prices, specifications, and availability are subject to change without notice, and do not include certain fees, taxes and charges that may be required by law or vary by manufacturer or region. Performance figures are guidelines only, and actual performance may vary. Photos may not represent actual vehicles or exact configurations. Content based on report preparer's input is subject to the accuracy of the input provided.
Data Version: 28141. Data Updated: Apr 2, 2026 1:49:00 AM UTC.

Vehicle: [Fleet] 2026 Chevrolet Silverado MD (CC56403) 2WD Reg Cab WT (✔ Complete)

FRONT TIRES

CODE	DESCRIPTION	MSRP	Invoice
XEZ	Tires, front 225/70R19.5G traction blackwall Pirelli Max Axle Load: 7,940 lbs. (Requires (YEZ) Tires, rear 225/70R19.5G traction blackwall Pirelli, Max Axle Load: 15,000 lbs.)	$100.00	$91.00
XGE	Tires, front 225/70R19.5G highway blackwall Continental Max Axle Load: 7,940 lbs. (Requires (YAV) Tires, rear 225/70R19.5G highway blackwall Continental, Max Axle Load: 15,000 lbs. or (YAY) Tires, rear 225/70R19.5G traction blackwall Continental, Max Axle Load: 15,000 lbs.)	$150.00	$136.50
XGF	Tires, front 225/70R19.5H traction blackwall Continental Max Axle Load: 8,000 lbs. (Requires (YAX) Tires, rear 225/70R19.5H traction blackwall Continental, Max Axle Load: 16,000 lbs.)	$400.00	$364.00
XGG	Tires, front 225/70R19.5G traction blackwall Continental Max Axle Load: 7,940 lbs. (Requires (YAY) Tires, rear 225/70R19.5G traction blackwall Continental, Max Axle Load: 15,000 lbs.)	$250.00	$227.50
XGH	Tires, front 225/70R19.5H highway blackwall Continental Max Axle Load: 8,000 lbs. (Requires (YAW) Tires, rear 225/70R19.5H highway blackwall Continental, Max Axle Load: 16,000 lbs. or (YAX) Tires, rear 225/70R19.5H traction blackwall Continental, Max Axle Load: 16,000 lbs.)	$300.00	$273.00

REAR TIRES

CODE	DESCRIPTION	MSRP	Invoice
YAV	Tires, rear 225/70R19.5G highway blackwall Continental Max Axle Load: 15,000 lbs. (Requires (XGE) Tires, front 225/70R19.5G highway blackwall Continental, Max Axle Load: 7,940 lbs.)	$300.00	$273.00
YAW	Tires, rear 225/70R19.5H highway blackwall Continental Max Axle Load: 16,000 lbs. (Requires (XGH) Tires, front 225/70R19.5H highway blackwall Continental, Max Axle Load: 8,000 lbs.)	$600.00	$546.00
YAX	Tires, rear 225/70R19.5H traction blackwall Continental Max Axle Load: 16,000 lbs. (Requires (XGF) Tires, front 225/70R19.5H traction blackwall Continental, Max Axle Load: 8,000 lbs. or (XGH) Tires, front 225/70R19.5H highway blackwall Continental, Max Axle Load: 8,000 lbs. Included with (PCN) Enhanced Traction Package with GVWR of 23,500 lbs.)	$800.00	$728.00
YAY	Tires, rear 225/70R19.5G traction blackwall Continental Max Axle Load: 15,000 lbs. (Requires (XGE) Tires, front 225/70R19.5G highway blackwall Continental, Max Axle Load: 7,940 lbs. or (XGG) Tires, front 225/70R19.5G traction blackwall Continental, Max Axle Load: 7,940 lbs.)	$500.00	$455.00
YBA	Tires, rear 225/70R19.5G highway Goodyear Range Max Max Axle Load: 15,000 lbs. (Requires (XBA) Tires front 225/70R19.5G highway Goodyear Range Max.)	$1,100.00	$1,001.00
YBB	Tires, rear 225/70R19.5G traction Goodyear Range Max Max Axle Load: 15,000 lbs. (Requires (XBA) Tires front 225/70R19.5G highway Goodyear Range Max or (XBB) Tires front 225/70R19.5G traction Goodyear Range Max.)	$1,300.00	$1,183.00
YEY	Tires, rear 225/70R19.5G highway blackwall Pirelli Max Axle Load: 15,000 lbs. (Requires (XEY) Tires front 225/70R19.5G Highway blackwall Pirelli.) (STD)	$0.00	$0.00
YEZ	Tires, rear 225/70R19.5G traction blackwall Pirelli Max Axle Load: 15,000 lbs. (Requires (XEY) Tires front 225/70R19.5G Highway blackwall Pirelli or (XEZ) Tires front 225/70R19.5G Traction blackwall Pirelli. Included with (PCN) Enhanced Traction Package with GVWR less than 23,500 lbs.)	$200.00	$182.00

This document contains information considered Confidential between GM and its Clients uniquely. The information provided is not intended for public disclosure. Prices, specifications, and availability are subject to change without notice, and do not include certain fees, taxes and charges that may be required by law or vary by manufacturer or region. Performance figures are guidelines only, and actual performance may vary. Photos may not represent actual vehicles or exact configurations. Content based on report preparer's input is subject to the accuracy of the input provided.
Data Version: 28141. Data Updated: Apr 2, 2026 1:49:00 AM UTC.

Vehicle: [Fleet] 2026 Chevrolet Silverado MD (CC56403) 2WD Reg Cab WT (✔ Complete)

SPARE TIRE

CODE	DESCRIPTION	MSRP	Invoice
9L3	Spare tire delete (STD)	$0.00	$0.00
ZBA	Tire, Spare 225/70R19.5G highway Goodyear Range Max (Requires (XBA) 225/70R19.5G Goodyear Range Max highway front tires or (YBA) 225/70R19.5G Goodyear Range Max highway rear tires. Includes (V33) Rim Wrench and handle only tool kit.) *PRICE TO FOLLOW*	W/A	W/A
ZBB	Tire, Spare 225/70R19.5G traction Goodyear Range Max (Requires (YBB) 225/70R19.5G Goodyear Range Max traction rear tires. Includes (V33) Rim Wrench and handle only tool kit.) *PRICE TO FOLLOW*	W/A	W/A
ZBT	Tire, Spare 225/70R19.5H traction blackwall Continental (Requires (XGF) 225/70R19.5H Continental traction blackwall front tires or (YAX) 225/70R19.5H Continental traction blackwall rear tires. Includes (V33) Rim Wrench and handle only tool kit.)	$425.00	$386.75
ZBU	Tire, Spare 225/70R19.5G traction blackwall Continental (Requires (XGG) 225/70R19.5G Continental traction blackwall front tires or (YAY) 225/70R19.5G Continental traction blackwall rear tires. Includes (V33) Rim Wrench and handle only tool kit.)	$425.00	$386.75
ZBV	Tire, Spare 225/70R19.5H highway blackwall Continental (Requires (XGH) 225/70R19.5H Continental highway blackwall front tires or (YAW) 225/70R19.5H Continental highway blackwall rear tires. Includes (V33) Rim Wrench and handle only tool kit.)	$425.00	$386.75
ZBW	Tire, Spare 225/70R19.5G highway blackwall Continental (Requires (XGE) 225/70R19.5G Continental highway blackwall front tires or (YAV) 225/70R19.5G Continental highway blackwall rear tires. Includes (V33) Rim Wrench and handle only tool kit.)	$425.00	$386.75
ZEY	Tire, Spare 225/70R19.5G Highway blackwall Pirelli (Requires (XEY) 225/70R19.5G BW HWY Pirelli front tires, or (YEY) 225/70R19.5G BW HWY Pirelli rear tires. Includes (V33) Rim Wrench and handle only tool kit.)	$400.00	$364.00
ZEZ	Tire, Spare 225/70R19.5G Traction blackwall Pirelli (Requires (XEZ) 225/70R19.5G BW Traction Pirelli front tires, or (YEZ) 225/70R19.5G BW Traction Pirelli rear tires. Includes (V33) Rim Wrench and handle only tool kit.)	$400.00	$364.00

PAINT SCHEME

CODE	DESCRIPTION	MSRP	Invoice
ZY1	Paint, solid	$0.00	$0.00

PAINT

CODE	DESCRIPTION	MSRP	Invoice
G48	Auburn Metallic	$0.00	$0.00
G6M	Dark Ash Metallic	$0.00	$0.00
G7C	Red Hot	$0.00	$0.00
GA0	Northsky Blue Metallic	$0.00	$0.00
GAN	Silver Ice Metallic	$0.00	$0.00

This document contains information considered Confidential between GM and its Clients uniquely. The information provided is not intended for public disclosure. Prices, specifications, and availability are subject to change without notice, and do not include certain fees, taxes and charges that may be required by law or vary by manufacturer or region. Performance figures are guidelines only, and actual performance may vary. Photos may not represent actual vehicles or exact configurations. Content based on report preparer's input is subject to the accuracy of the input provided.
Data Version: 28141. Data Updated: Apr 2, 2026 1:49:00 AM UTC.

Vehicle: [Fleet] 2026 Chevrolet Silverado MD (CC56403) 2WD Reg Cab WT (✔ Complete)

PAINT

CODE	DESCRIPTION	MSRP	Invoice
GAZ	Summit White	$0.00	$0.00
GBA	Black	$0.00	$0.00
GHR	Greenstone Metallic	$0.00	$0.00
GLT	Glacier Blue Metallic (Additional charge - premium paint.)	$395.00	$359.45
GNO	Slate Gray Metallic	$0.00	$0.00
GXD	Sterling Gray Metallic	$0.00	$0.00
GXP	Lakeshore Blue Metallic	$0.00	$0.00

SEAT TYPE

CODE	DESCRIPTION	MSRP	Invoice
A52	Seats, front 40/20/40 split-bench, cloth or vinyl 3-passenger. Includes driver and front passenger recline with outboard head restraints and center fold-down armrest with storage. Also includes manually adjustable driver lumbar and storage pockets. (Requires (IOR) Chevrolet Infotainment System with 7" diagonal color touch-screen. Includes (AG1) 10-way power seat.)	Inc.	Inc.
AE7	Seats, front 40/20/40 split-bench, 3-passenger driver and front passenger recline with outboard head restraints and center fold-down armrest with storage. Vinyl has fixed lumbar and cloth has manually adjustable driver lumbar. (Not available with (H0U) Jet Black Interior.) (STD)	$0.00	$0.00

SEAT TRIM

CODE	DESCRIPTION	MSRP	Invoice
H0U	Jet Black, Cloth seat trim includes manually adjustable driver lumbar (Not available with (APL) Passenger Seat Delete.)	$0.00	$0.00
H2Q	Dark Ash seats with Jet Black interior accents, Vinyl seat trim	$0.00	$0.00
H2R	Dark Ash seats with Jet Black interior accents, Cloth seat trim includes manually adjustable driver lumbar	$0.00	$0.00

RADIO

CODE	DESCRIPTION	MSRP	Invoice
IO3	Audio system, 4.2" diagonal color display, AM/FM stereo with USB port and auxiliary jack (Requires (AE7) front 40/20/40 split-bench seat. Not available with (UE1) OnStar services capable.) (STD)	$0.00	$0.00
IOR	Audio system, Chevrolet Infotainment System with 7" diagonal color touch-screen, AM/FM stereo with seek-and-scan and digital clock, includes Bluetooth handsfree calling and streaming audio with select phones; wired phone projection via select 3rd party apps; USB ports; auxiliary jack. (Includes (UQ3) 6-speaker audio system. Requires (A52) Front 40/20/40 split-bench seats. Not available with (TG5) Single-slot CD/MP3 player.)	$295.00	$268.45

This document contains information considered Confidential between GM and its Clients uniquely. The information provided is not intended for public disclosure. Prices, specifications, and availability are subject to change without notice, and do not include certain fees, taxes and charges that may be required by law or vary by manufacturer or region. Performance figures are guidelines only, and actual performance may vary. Photos may not represent actual vehicles or exact configurations. Content based on report preparer's input is subject to the accuracy of the input provided.
Data Version: 28141. Data Updated: Apr 2, 2026 1:49:00 AM UTC.

Vehicle: [Fleet] 2026 Chevrolet Silverado MD (CC56403) 2WD Reg Cab WT (✔ Complete)

ADDITIONAL EQUIPMENT - PACKAGE

CODE	DESCRIPTION	MSRP	Invoice
5D4	Aerial Work Platform Vocational Package: Provides calibrations specific to chassis with an upfit consisting of an Aerial Lift, Bucket or Boom Lift. (Not available with (ANC) Shuttle Bus Package, (ANK) School Bus (Non-Conforming) Package, (PCH) Motorhome Package or (YF2) Emergency Service Package. Requires (PTO) Power Take Off.)	$0.00	$0.00
ANC	Shuttle Bus Package (Requires (PTX) Power Take-Off (PTO), not installed and (MA6) or (MB6) Transmission.)	$0.00	$0.00
ANK	School Bus (Non-Conforming) Package (Requires (PTX) Power Take-Off (PTO), not installed and (MA6) or (MB6) Transmission.)	$0.00	$0.00
PCH	Motorhome Package (Requires Motorhome transmission (MBW), (ME0), (MIX) or (MF0).)	$0.00	$0.00
PCJ	Vocational Specific Heavy Suspension Package For 165" WB trucks only. Allows the selection of 7,000 lbs., 8,000 lbs., front axles and/or 15,500 lbs. rear spring suspension on trucks that will be upfitted with the following vocational bodies: Utility/Service Bodies, Aerial Lift/Bucket bodies, Front Plow/Rear Spreader Applications, and Landscape Dump Bodies. (Requires (ED9) 165" Wheelbase and (FTA) 7,000 lbs. Front axle/(FK6) 7,000 lbs. Front suspension or (FTL) 8,000 lbs. Front axle/(FSN) 8,000 lbs. Front suspension and/or (FU7) 15,500 lbs. rear suspension.)	$0.00	$0.00
PCM	Wrecker/Rollback Vocational Package (Requires (G40) 12,000lbs., (GP1) 13,500 lbs. or (GP8) 15,500 lbs. rear air suspension. Not available with (JPZ) Suspension air control valve.)	$0.00	$0.00
PCN	Enhanced Traction Package includes (G86) Axle, Limited Slip and (YEZ) Pirelli rear 225/70R19.5G traction tires (for GVWR's less than 23,500 lbs.) or (YAX) Continental rear 225/70R19.5H traction tires (for GVWR of 23,500 lbs.)	$95.00	$86.45
VYU	Snow Plow Prep Package includes (UNL) auxiliary harness for headlamps and turn signals, (KW5) 220-amp alternator, forward lamp wiring harness and (TRW) provision for cab roof mounted lamp/beacon (Note: (KW5) 220-amp alternator can be upgraded to (KHB) dual, 150 amps and 220 amps each alternators.)	$340.00	$309.40
YF2	Emergency Service Package includes (KHB) dual alternators, (UZF) backup alarm and (5DY) end of cab wiring provisions (Requires (FPF) DPF, diesel particulate filter, manual regeneration and Emergency Service transmission, (MBY), (MH1), (MHV) or (MG0). Not available with (9D4) Governor, electronic speed sensor set to 55 MPH, SEO. Requires (G86) limited slip rear axle. Vehicle must meet the definition of a dedicated Emergency Vehicle, Ambulance or Fire Truck per 40 CFR Parts 85, 86, and 1039: Heavy-Duty Highway Program: Provides (ANM) Emissions Revisions for Emergency Vehicles. Incomplete vehicle chassis requires further manufacture and certification by a final stage manufacturer.)	$745.00	$677.95

ADDITIONAL EQUIPMENT - MECHANICAL

CODE	DESCRIPTION	MSRP	Invoice
7Y8	Batteries, heavy-duty dual 1300 cold-cranking amps includes battery box mounted to left side under cab	$200.00	$182.00
7Y9	Batteries, heavy-duty triple 2250 cold-cranking amps temporarily mounted behind cab, no battery box included	$300.00	$273.00
8E4	Additional fuel, 5 gallons	$40.00	$36.40

This document contains information considered Confidential between GM and its Clients uniquely. The information provided is not intended for public disclosure. Prices, specifications, and availability are subject to change without notice, and do not include certain fees, taxes and charges that may be required by law or vary by manufacturer or region. Performance figures are guidelines only, and actual performance may vary. Photos may not represent actual vehicles or exact configurations. Content based on report preparer's input is subject to the accuracy of the input provided.
Data Version: 28141. Data Updated: Apr 2, 2026 1:49:00 AM UTC.

Vehicle: [Fleet] 2026 Chevrolet Silverado MD (CC56403) 2WD Reg Cab WT (✔ Complete)

ADDITIONAL EQUIPMENT - MECHANICAL

CODE	DESCRIPTION	MSRP	Invoice
9B9	Governor, electronic speed sensor set to 70 MPH (Not available with rear axle ratio (008) 4.88 ratio.)	$80.00	$72.80
9C2	Governor, electronic speed sensor set to 65 MPH	$80.00	$72.80
9D4	Governor, electronic speed sensor set to 55 MPH	$80.00	$72.80
9D6	Governor, electronic speed sensor set to 79 MPH (Requires rear axle ratio (013) 3.73 ratio.)	$80.00	$72.80
9D7	Governor, electronic speed sensor set to 75 MPH (Not available with rear axle ratios, (005) 4.56 or (008) 4.88 ratio.)	$80.00	$72.80
BTN	Battery, top post threaded, battery jump start stud (located on battery box) (Requires (7Y7) 1100 cold-cranking amps batteries or (7Y8) 1300 cold-cranking amps batteries.)	$50.00	$45.50
F0D	Axle to End of Frame, 63" (Requires wheelbase (ED9) 165", (ER2) 189" or (ED5) 201".)	$100.00	$91.00
F0G	Axle to End of Frame, 83" (Requires wheelbase (FBC) 243".)	$150.00	$136.50
F0I	Axle to End of Frame, 75" (Requires wheelbase (ED5) 201", (EQB) 219" or (ER2) 189".)	$100.00	$91.00
F0K	Axle to End of Frame, 91" (Requires wheelbase (FPN) 231" or (ED9) 165" wheelbase.)	$150.00	$136.50
F59	Front stabilizer bar	$175.00	$159.25
FPF	DPF, diesel particulate filter, manual regeneration customer regeneration will not be allowed until the DPF load percentage has reached 100% full and a driver information center (DIC) message has been shown (Required with (YF2) Emergency Service Package.)	$250.00	$227.50
G68	Shock Absorbers, rear (Included with (FTC) 6,250 lb. front axle. Not available with (G40) 12,000 lbs., (GP1) 13,500 lbs. or (GP8) 15,500 lbs. rear air suspension. Not available with (91B), (91C), (91D) or (91E) prep for LiquidSpring rear suspension (incomplete).)	$65.00	$59.15
G80	Differential, heavy-duty locking rear (Requires (J27) 15,500 lb. rear axle. Not available with (91B), (91C), (91D) or (91E) prep for LiquidSpring rear suspension. With (ED9) 165" Wheelbase, requires (PCJ) Vocational Specific Heavy Suspension Package or (9C2) 65 MPH road speed governor. Not available with (G40), (GP1) or (GP8) rear air suspensions when ordered with (ED9) 165" wheelbase. Not available with (G86) limited slip rear axle. Not available with (YF2) Emergency Service Package.)	$1,350.00	$1,228.50
G86	Axle, limited slip, Dana Spicer Truetrac, torque proportioning limited slip (Included with (PCN) Enhanced Traction Package.)	$395.00	$359.45
JPZ	Suspension air control valve, air release valve with switch in cab (Requires (G40) 12,000 lbs., (GP1) 13,500 lbs. or (GP8) 15,500 lbs. rear air suspension. Not available with (PCM) Wrecker/Rollback Vocational Package.)	$60.00	$54.60
K05	Engine block heater	$100.00	$91.00
KHB	Alternators, dual, 150 amps and 220 amps each (Included with (YF2) Emergency Service Package.)	$380.00	$345.80
KT0	Heater hose, silicone (Requires (KUD) Heater hose clamps, (Breeze) Belleville washer type.)	$100.00	$91.00
KUD	Heater hose clamps, (Breeze) Belleville washer type	$30.00	$27.30

This document contains information considered Confidential between GM and its Clients uniquely. The information provided is not intended for public disclosure. Prices, specifications, and availability are subject to change without notice, and do not include certain fees, taxes and charges that may be required by law or vary by manufacturer or region. Performance figures are guidelines only, and actual performance may vary. Photos may not represent actual vehicles or exact configurations. Content based on report preparer's input is subject to the accuracy of the input provided.
Data Version: 28141. Data Updated: Apr 2, 2026 1:49:00 AM UTC.

Vehicle: [Fleet] 2026 Chevrolet Silverado MD (CC56403) 2WD Reg Cab WT (✔ Complete)

ADDITIONAL EQUIPMENT - MECHANICAL

CODE	DESCRIPTION	MSRP	Invoice
KW5	Alternator, 220 amps (Included with (VYU) Snow Plow Prep Package.)	$150.00	$136.50
LVA	Governor, electronic speed sensor set to 60 MPH	$80.00	$72.80
N12	Exhaust system, straight, terminates ahead of rear wheels (Not available with (ED9) 165" wheelbase.)	$50.00	$45.50
NPJ	Exhaust system, left side exit ahead of rear wheels (Requires (N2L) 40-gal fuel tank. Available on the following wheelbases: (ER2) 189" wheelbase, (ED5) 201" wheelbase, (EQB) 219" wheelbase, (FPN) 231" wheelbase, (FBC) 243" wheelbase.)	$145.00	$131.95
NPK	Exhaust system, right side exit ahead of rear wheels (Requires one of the following wheelbases: (ER2) 189", (ED5) 201", (EQB) 219", (FPN) 231" or (FBC) 243".)	$145.00	$131.95
NSQ	Fuel tank, front and rear, 65 gallon total (Not available with (NPJ) left side exit exhaust system ahead of rear wheels when ordered with (EQB) 219" wheelbase.)	$625.00	$568.75
NVK	Fuel tank, front, 25 gallon	$125.00	$113.75
NXG	Additional fuel, 20 gallons (Not available with (NVK) front 25 gallon fuel tank.)	$160.00	$145.60
UF3	High idle switch (Not available with (PTO) Power Take-off. Requires (PTX) Power Take-Off (PTO), not installed.)	$200.00	$182.00
V33	Tool kit, Rim Wrench and handle only (Included with (ZBA), (ZBB), (ZEY), (ZEZ), (ZBT), (ZBU), (ZBV) and (ZBW) spare tires.)	$40.00	$36.40
V76	Recovery hooks, front, frame-mounted, Black (Not available with (T3A) front bumper with 4" extension.)	$25.00	$22.75
VND	Governor, electronic speed sensor set to 50 MPH	$80.00	$72.80

ADDITIONAL EQUIPMENT - EXTERIOR

CODE	DESCRIPTION	MSRP	Invoice
01U	Paint Scheme, solid, SEO (Required for all SEO paint color selections.)	$0.00	$0.00
5D1	Bumper, front, Gray	$55.00	$50.05
5DX	Electrical Provisions, rear of cab, upfitter, body builder wiring includes Sealed Connectors for Tail/Amber Turn/Marker/Backup/Accessory Power/Ground and Sealed Connector for Stop/Turn	$115.00	$104.65
5DY	Electrical Provisions, rear of frame, upfitter, body builder wiring includes Sealed Connectors for Tail/Amber Turn/Marker/Backup/Accessory Power/Ground and Sealed Connector for Stop/Turn (Included with (YF2) Emergency Service Package. Not available with (5DX) Electrical Provisions to rear of cab.)	$230.00	$209.30
6Y5	Ornamentation Not Installed (Decals and nameplates will be shipped loose in the truck.)	$0.00	$0.00
7X6	Spotlamp Prep Kit, Left-hand pillar mounted, Halogen. Requires (WU2) TSC Ship-Thru with a purchase order to complete installation. (Not available with (9L9) wiring harness.)	$250.00	$227.50
7X7	Spotlamps, Left and right-hand pillar mounted, Halogen (Not available with (9L9) wiring harness. Not available with (7X6) Spotlamp Prep kit.) *PRICE TO FOLLOW*	W/A	W/A

This document contains information considered Confidential between GM and its Clients uniquely. The information provided is not intended for public disclosure. Prices, specifications, and availability are subject to change without notice, and do not include certain fees, taxes and charges that may be required by law or vary by manufacturer or region. Performance figures are guidelines only, and actual performance may vary. Photos may not represent actual vehicles or exact configurations. Content based on report preparer's input is subject to the accuracy of the input provided.
Data Version: 28141. Data Updated: Apr 2, 2026 1:49:00 AM UTC.

Vehicle: [Fleet] 2026 Chevrolet Silverado MD (CC56403) 2WD Reg Cab WT (✔ Complete)

ADDITIONAL EQUIPMENT - EXTERIOR

CODE	DESCRIPTION	MSRP	Invoice
8F2	Ornamentation, delete	$0.00	$0.00
8H5	Bumper, front, delete (Not available with (T3A) front bumper with 4" extension or (V23) grille guard screen, stone protection.) *CREDIT*	($30.00)	($27.30)
9F5	Paints, solid, Mosaic Black Metallic All normally body colored non-sheet metal parts will be Black. May require extended lead time. (Requires (01U) Special Paint.)	$0.00	$0.00
9V1	Paints, solid, Graphite Metallic All normally body colored non-sheet metal parts will be Black. May require extended lead time. (Requires (01U) Special Paint.)	$0.00	$0.00
9V4	Paints, solid, Havana Brown Metallic All normally body colored non-sheet metal parts will be Black. May require extended lead time. (Requires (01U) Special Paint.)	$0.00	$0.00
9V5	Paints, solid, Woodland Green All normally body colored non-sheet metal parts will be Black. May require extended lead time. (Requires (01U) Special Paint.)	$0.00	$0.00
9V8	Paints, solid, Smokey Quartz Metallic All normally body colored non-sheet metal parts will be Black. May require extended lead time. (Requires (01U) Special Paint.)	$0.00	$0.00
9W1	Paints, solid, Oxford Brown Metallic All normally body colored non-sheet metal parts will be Black. May require extended lead time. (Requires (01U) Special Paint.)	$0.00	$0.00
9W2	Paints, solid, Satin Steel Metallic All normally body colored non-sheet metal parts will be Black. May require extended lead time. (Requires (01U) Special Paint.)	$0.00	$0.00
9W3	Paints, solid, Wheatland Yellow All normally body colored non-sheet metal parts will be Black. May require extended lead time. (Requires (01U) Special Paint.)	$0.00	$0.00
9W4	Paints, solid, Tangier Orange All normally body colored non-sheet metal parts will be Black. May require extended lead time. (Requires (01U) Special Paint.)	$0.00	$0.00
9W6	Paints, solid, Deep Ocean Blue Metallic All normally body colored non-sheet metal parts will be Black. May require extended lead time. (Requires (01U) Special Paint.)	$0.00	$0.00
9W9	Paints, solid, Shadow Gray Metallic All normally body colored non-sheet metal parts will be Black. May require extended lead time. (Requires (01U) Special Paint.)	$0.00	$0.00
A61	Rear Window Delete (Requires (ANC) Shuttle Bus Package, (PCH) Motorhome Package, (ANK) School Bus (Non-Conforming) Package or (YF2) Emergency Service Package. Not available with (C49) Defogger, rear-window electric.)	$0.00	$0.00
AKO	Glass, deep-tinted (Not available with (A61) rear window delete.)	$100.00	$91.00
DGD	Mirrors, outside, black with manual folding, manual adjusting, high-visibility vertical camper-style, and lower convex spotter glass 102", Wide Load (Replaces standard exterior mirrors and not available with any other exterior mirrors.)	$645.00	$586.95
DGP	Mirrors, outside, black, heated power-adjustable, high-visibility vertical camper-style, and lower convex spotter glass, manual-folding. Convex glass is not heated and not power adjustable. 102", Wide Load (Requires (A31) power windows. Replaces standard exterior mirrors and not available with any other exterior mirrors.)	Inc.	Inc.
DP9	Mirror caps, chrome (Requires (DPN) heated power-adjustable vertical trailering mirrors.)	$50.00	$45.50

This document contains information considered Confidential between GM and its Clients uniquely. The information provided is not intended for public disclosure. Prices, specifications, and availability are subject to change without notice, and do not include certain fees, taxes and charges that may be required by law or vary by manufacturer or region. Performance figures are guidelines only, and actual performance may vary. Photos may not represent actual vehicles or exact configurations. Content based on report preparer's input is subject to the accuracy of the input provided.
Data Version: 28141. Data Updated: Apr 2, 2026 1:49:00 AM UTC.

Vehicle: [Fleet] 2026 Chevrolet Silverado MD (CC56403) 2WD Reg Cab WT (✔ Complete)

ADDITIONAL EQUIPMENT - EXTERIOR

CODE	DESCRIPTION	MSRP	Invoice
DPN	Mirrors, outside heated power-adjustable vertical trailering, upper glass, manual-folding and extending, black. Includes integrated turn signal indicators consisting of 51 square inch flat mirror surface positioned over a 24.5 square inch convex mirror surface with a common head and lower convex spotter glass (convex glass is not heated and not power adjustable) and addition of Auxiliary cargo lamp for backing up (helps to see trailer when backing up with a trailer) and amber auxiliary clearance lamp (Requires (A31) power windows.)	$355.00	$323.05
E0N	Assist Steps, aluminum	$200.00	$182.00
E20	Door handles, outside, chrome	$40.00	$36.40
FF3	Oil seal for front hub, Chicago Rawhide Nitrile for oil lubricated wheel bearings	$25.00	$22.75
FG0	Oil filled front hubs, synthetic oil EmGard FE-75W-90 (Requires (FF3) Oil seal for front hub.)	$30.00	$27.30
G7K	Antenna equipment includes additional antenna, cable and Groundplate (Requires (UE1) OnStar services capable. Antenna, Cable and Groundplate will be shipped loose in the truck.)	$50.00	$45.50
JPY	Air Dryer, heated (Requires (KUT) Air Compressor Accessory Drive.)	$435.00	$395.85
JTR	Taillamp wiring harness provisions includes wiring for standard left and right taillamps, separate 8 feet of extra cable wiring for left and right body-mounted taillights	$50.00	$45.50
KUT	Air Compressor Accessory Drive (Not available with (91B), (91C), (91D) or (91E) prep for LiquidSpring rear suspension. Required with all models equipped with Rear Air Suspension (G40/GP1/GP8). Available as free flow option on all models without Rear Air Suspension.)	$350.00	$318.50
PWY	Wheel, 19.5" x 6.75", spare, steel, Black, 8-holes temporary mounted on frame, hub piloted (Required and only available with (PWQ), (PWR) or (PWS) steel wheels when ordered with a spare tire.)	$0.00	$0.00
PWZ	Wheel, 19.5" x 6.75", spare, aluminum, 8-holes temporary mounted on frame. Dura-Bright finish is on the outside of the wheel. (Required and only available with (PWV) 19.5" x 6.75", aluminum, 8-holes, hub piloted wheels or (PWG) 19.5" x 6.75", 6-aluminum, 8-holes, hub piloted wheels when a spare tire is ordered.)	$175.00	$159.25
Q8D	Mud Flaps, front	$175.00	$159.25
Q91	Tire valve cap, Haltec flow-thru (Not available with (Q92) Alligaro V2B flo-thru tire valve caps.)	$30.00	$27.30
Q92	Tire valve cap, (Alligaro V2B) flo-thru (Not available with (Q91) Haltec flow-thru tire valve caps.)	$30.00	$27.30
T3A	Bumper, front with 4" extension (Not available with (V23) grille guard screen, stone protection or (V76) recovery hooks.)	$50.00	$45.50
T3U	Fog lamps, front, halogen (Not available with (8H5) front bumper delete.)	$140.00	$127.40
TGK	Paint, solid, special paint (SEO)	$660.00	$600.60
TRW	Provision for cab roof-mounted lamp/beacon provides an overhead console mounted switch and electrical wiring tucked beneath the headliner for a body upfitter to connect a body-mounted warning or emergency lamp (Included with (VYU) Snow Plow Prep Package.)	$30.00	$27.30

This document contains information considered Confidential between GM and its Clients uniquely. The information provided is not intended for public disclosure. Prices, specifications, and availability are subject to change without notice, and do not include certain fees, taxes and charges that may be required by law or vary by manufacturer or region. Performance figures are guidelines only, and actual performance may vary. Photos may not represent actual vehicles or exact configurations. Content based on report preparer's input is subject to the accuracy of the input provided.
Data Version: 28141. Data Updated: Apr 2, 2026 1:49:00 AM UTC.

Vehicle: [Fleet] 2026 Chevrolet Silverado MD (CC56403) 2WD Reg Cab WT (✔ Complete)

ADDITIONAL EQUIPMENT - EXTERIOR

CODE	DESCRIPTION	MSRP	Invoice
UEA	Taillamp delete (Not available with (TR1) Rear Taillamp or (UGE) LED Rear stop and turn lights.)	$0.00	$0.00
UGE	Lamps, rear, LED stop/turn and license plate, with incandescent backup lamps	$240.00	$218.40
UNL	Auxiliary harness, 3' for headlamps and turn signals (Included with (VYU) Snow Plow Prep Package.)	$160.00	$145.60
V22	Grille, chrome	$220.00	$200.20
V23	Grille guard screen, stone protection (mounted to bumper) (Not available with (T3A) front bumper with 4" extension.)	$90.00	$81.90
V46	Bumper, front chrome	$350.00	$318.50
VK3	License plate kit, front (will be shipped with trucks with ship-to states that require front license plate)	$15.00	$13.65
WRD	Work light circuit provides additional wire for utility light at end of frame	$30.00	$27.30

ADDITIONAL EQUIPMENT - ENTERTAINMENT

CODE	DESCRIPTION	MSRP	Invoice
___	Bluetooth for phone, personal cell phone connectivity to vehicle audio system (Included and only available with (IOR) Chevrolet Infotainment System with 7" diagonal color touch-screen.)	Inc.	Inc.
TG5	Single-slot CD/MP3 player (Not available with (IOR) Chevrolet Infotainment System with 7" diagonal color touch-screen.)	$50.00	$45.50
UQ3	6-speaker audio system (Included and only available with (IOR) Chevrolet Infotainment System with 7" diagonal color touch-screen.)	Inc.	Inc.

ADDITIONAL EQUIPMENT - INTERIOR

CODE	DESCRIPTION	MSRP	Invoice
379	Seat Belt, Front, Orange (center seat belt will ship loose)	$40.00	$36.40
3F9	Seat Belt, Front, Red (center seat belt will ship loose)	$40.00	$36.40
5H1	Key system, 2 spare keys	$45.00	$40.95
6C7	Dome Lamp prep, passenger Additional Red and White LED Dome Lamp installed by Truck Specialty Center (TSC). This option requires an additional charge and purchase order between the dealer, upfitter or customer and TSC to complete installation of this option. (Requires (WU2) Truck Specialty Center (TSC) Ship-Thru. Not available with (UEH) Provisions for electrical switch bank.)	$95.00	$86.45
6E2	Key common, complete vehicle fleet Provides a single key with a specific code that is common to the door locks and ignition of all the vehicles in the vehicle fleet. Key code is an alternate to SEO (6E8) complete vehicle fleet common key. NOTE: NOT COMPATIBLE with previous model years (Requires a Fleet or Government order type.)	$25.00	$22.75

This document contains information considered Confidential between GM and its Clients uniquely. The information provided is not intended for public disclosure. Prices, specifications, and availability are subject to change without notice, and do not include certain fees, taxes and charges that may be required by law or vary by manufacturer or region. Performance figures are guidelines only, and actual performance may vary. Photos may not represent actual vehicles or exact configurations. Content based on report preparer's input is subject to the accuracy of the input provided.
Data Version: 28141. Data Updated: Apr 2, 2026 1:49:00 AM UTC.

Vehicle: [Fleet] 2026 Chevrolet Silverado MD (CC56403) 2WD Reg Cab WT (✔ Complete)

ADDITIONAL EQUIPMENT - INTERIOR

CODE	DESCRIPTION	MSRP	Invoice
6E8	Key common, complete vehicle fleet Provides a single key with a specific code that is common to the door locks and ignition of all the vehicles in the vehicle fleet. Key code is an alternate to SEO (6E2) complete vehicle fleet common key. NOTE: NOT COMPATIBLE with previous model years (Requires a Fleet or Government order type.)	$25.00	$22.75
8X8	Label, fasten seat belts "Fasten Seat Belts" reminder label on right-hand and left-hand front side door glass	$4.00	$3.64
9D9	Mirror, inside rearview delete	$0.00	$0.00
9L9	Wiring harness accessory for 9L7 wiring to junction block Includes connector and blunt cut wires. (Not available with (91B), (91C), (91D) or (91E) prep for LiquidSpring rear suspension.)	$15.00	$13.65
9S1	Front Center Seat Delete, Vinyl Driver and passenger front individual seats in base vinyl trim. Derived from RPO (AE7) 40-20-40 split bench seat with the 20% section removed which also removes the USB port and input jack for audio system. Seats are manual, not power. Does not include a floor console. All exposed floor area will remain untrimmed. Standard vinyl rear seat with trim matching front seats will be provided on Crew Cab models. (Requires (AE7) front 40/20/40 split bench seat and trim code (H2Q) Dark Ash seats with Jet Black interior accents interior trim.)	$0.00	$0.00
9U3	Front Center Seat Delete, Cloth Driver and passenger front individual seats in base cloth trim. Derived from RPO (AE7) 40-20-40 split bench seat with the 20% section removed which also removes the USB port and input jack for audio system. Seats are manual, not power. Does not include a floor console. All exposed floor area will remain untrimmed. Standard cloth rear seat with trim matching front seats will be provided on Crew Cab models. (Requires (H2R) Dark Ash seats with Jet Black or (H0U) Jet Black interior accents interior trims.)	$0.00	$0.00
A31	Windows, power with driver express up and down and express down on all other windows (Requires (DPN) outside heated power-adjustable vertical trailering mirrors or (DGP) outside, black, heated power-adjustable, high-visibility vertical camper-style 102" wide load mirrors.)	$290.00	$263.90
AG1	Seat adjuster, driver 10-way power (Included and only available with (A52) front 40/20/40 split-bench seat.)	Inc.	Inc.
APL	Passenger seat, delete (removes 20/40 section of passenger and center seat section. All exposed floor area will remain untrimmed) (Requires (AY1) or (AZ2) driver side only airbags. Not available with (H0U) Jet Black Interior Trim.) *CREDIT*	($125.00)	($113.75)
AQQ	Remote Keyless Entry	$175.00	$159.25
C49	Defogger, rear-window electric	$175.00	$159.25
C62	HVAC Provisions Aux A/C Compressor includes an additional, bare A/C compressor mounted to the engine accessory drive. Upfitter responsible for AC hose connections, plumbing and control circuit (not included) (Not available with (KUT) Air Compressor Accessory Drive, (G40), (GP1) or (GP8) rear air suspension.)	$475.00	$432.25
DRZ	Rear Camera Mirror, inside rearview auto-dimming with full camera display (Not available with any other inside rearview mirror or (9D9) inside rearview mirror delete.)	$535.00	$486.85
KI4	Power outlet, 120-volt AC	$175.00	$159.25

This document contains information considered Confidential between GM and its Clients uniquely. The information provided is not intended for public disclosure. Prices, specifications, and availability are subject to change without notice, and do not include certain fees, taxes and charges that may be required by law or vary by manufacturer or region. Performance figures are guidelines only, and actual performance may vary. Photos may not represent actual vehicles or exact configurations. Content based on report preparer's input is subject to the accuracy of the input provided.
Data Version: 28141. Data Updated: Apr 2, 2026 1:49:00 AM UTC.

Vehicle: [Fleet] 2026 Chevrolet Silverado MD (CC56403) 2WD Reg Cab WT (✔ Complete)

ADDITIONAL EQUIPMENT - INTERIOR

CODE	DESCRIPTION	MSRP	Invoice
SFW	Back-up alarm calibration This calibration will allow installation of an aftermarket back-up alarm by disabling rear perimeter lighting	$50.00	$45.50
UEH	Provisions for electrical switch bank Consists of (6) two position, latching, rocker style switch modules with an on/off indicator window. The application of each switch will be defined by the customer/upfitter. Located on Headliner. (Requires (KW5) 220 Amp Alternator or (KHB) 150 amp/220 amp dual alternators. Not available with (6C7) passenger dome lamp prep.)	$675.00	$614.25

ADDITIONAL EQUIPMENT - SAFETY-INTERIOR

CODE	DESCRIPTION	MSRP	Invoice
___	OnStar Basics (OnStar Fleet Basics for Fleet) Drive confidently with core OnStar services including remote commands, built-in voice assistance, real-time traffic and navigation, and Automatic Crash Response to help if you're in need. (Included and only available with (UE1) OnStar. OnStar Basics includes remote commands, Navigation, Voice Assistance, and Automatic Crash Response, for eligible vehicles with compatible software. For MY25 vehicles, OnStar Basics is standard for 8 years; OnStar plan, working electrical system, cell reception and GPS signal required. OnStar links to emergency services. Service coverage varies with conditions and location. Service availability, features and functionality vary by device and software version. See onstar.com for details and limitations.)	$0.00	$0.00
AJ7	Airbags, Single-stage frontal airbags for driver and front outboard passenger; Seat-mounted side-impact airbags for driver and front outboard passenger. Includes airbag deactivation switch for front outboard passenger airbag (Requires (ANC) Shuttle Bus, (PCH) Motorhome, or (YF2) Ambulance Packages. Always use seat belts and child restraints. Children are safer when properly secured in a rear seat in the appropriate child restraint. See the Owner's Manual for more information.)	$0.00	$0.00
AY1	Airbags, Frontal and seat-mounted side-impact for driver only; Head-curtain on both sides with rollover protection Requires (APL) passenger seat delete. Always use seat belts and child restraints. Children are safer when properly secured in a rear seat in the appropriate child restraint. See the Owner's Manual for more information.) *CREDIT*	($195.00)	($177.45)
AZ2	Airbags, Frontal and seat-mounted side-impact for driver only (Requires (APL) passenger seat delete and one of the following sales packages: (ANC) Shuttle Bus, (PCH) Motorhome, or (YF2) Ambulance Packages. Always use seat belts and child restraints. Children are safer when properly secured in a rear seat in the appropriate child restraint. See the Owner's Manual for more information.)	$0.00	$0.00
U0Z	Horn, Trumpet Style, dual-note	$25.00	$22.75
UE1	OnStar services capable (Requires (IOR) Chevrolet Infotainment System with 7" diagonal color touch-screen. Includes compass in instrument cluster. Terms and limitations apply. See onstar.com or dealer for details.)	$175.00	$159.25
UZF	Backup alarm (Includes (SFW) SEO Calibration for backup alarm. Included with (YF2) Emergency Service Package.)	$175.00	$159.25

This document contains information considered Confidential between GM and its Clients uniquely. The information provided is not intended for public disclosure. Prices, specifications, and availability are subject to change without notice, and do not include certain fees, taxes and charges that may be required by law or vary by manufacturer or region. Performance figures are guidelines only, and actual performance may vary. Photos may not represent actual vehicles or exact configurations. Content based on report preparer's input is subject to the accuracy of the input provided.
Data Version: 28141. Data Updated: Apr 2, 2026 1:49:00 AM UTC.

Vehicle: [Fleet] 2026 Chevrolet Silverado MD (CC56403) 2WD Reg Cab WT (✔ Complete)

ADDITIONAL EQUIPMENT - LPO

CODE	DESCRIPTION	MSRP	Invoice
RDI	LPO, Keyless Entry Keypad, 5-digit programmable keypad located near outside driver's door handle (dealer-installed) (Requires (AQQ) Remote Keyless Entry.)	$250.00	$227.50

ADDITIONAL EQUIPMENT - OTHER

CODE	DESCRIPTION	MSRP	Invoice
P0J	24 Months OnStar Protect Includes up to 24 months of OnStar Protect. Confidence on the road is the only way to go. With Emergency Advisors and security services at the ready, OnStar is there for you. Working electrical system, cell reception and GPS signal required. OnStar links to emergency services. Service coverage varies with conditions and location. Service availability, features and functionality vary by device and software version. See gmenvolve.com/software/onstar for details and limitations. Non-transferable and non-refundable. (Requires (UE1) OnStar. Requires one of the following Fleet or Government order types: FLS, FNR, FRC, FBC, FGO or FEF. Not available with P0U, P0K or P0L. Not available with a ship-to of Guam, Puerto Rico or the Virgin Islands.)	$329.00	$338.87
P0K	36 Months OnStar Protect Includes up to 36 months of OnStar Protect. Confidence on the road is the only way to go. With Emergency Advisors and security services at the ready, OnStar is there for you. Working electrical system, cell reception and GPS signal required. OnStar links to emergency services. Service coverage varies with conditions and location. Service availability, features and functionality vary by device and software version. See gmenvolve.com/software/onstar for details and limitations. Non-transferable and non-refundable. (Requires (UE1) OnStar. Requires one of the following Fleet or Government order types: FLS, FNR, FRC, FBC, FGO or FEF. Not available with P0U, P0J, P0L or P0Q. Not available with a ship-to of Guam, Puerto Rico or the Virgin Islands.)	$489.00	$503.67
P0L	48 Months OnStar Protect Includes up to 48 months of OnStar Protect. Confidence on the road is the only way to go. With Emergency Advisors and security services at the ready, OnStar is there for you. Working electrical system, cell reception and GPS signal required. OnStar links to emergency services. Service coverage varies with conditions and location. Service availability, features and functionality vary by device and software version. See gmenvolve.com/software/onstar for details and limitations. Non-transferable and non-refundable. (Requires (UE1) OnStar. Requires one of the following Fleet or Government order types: FLS, FNR, FRC, FBC, FGO or FEF. Not available with P0U, P0J, P0K or P0Q. Not available with a ship-to of Guam, Puerto Rico or the Virgin Islands.)	$659.00	$678.77
P0Q	60 Months OnStar Protect Includes up to 60 months of OnStar Protect. Confidence on the road is the only way to go. With Emergency Advisors and security services at the ready, OnStar is there for you. Working electrical system, cell reception and GPS signal required. OnStar links to emergency services. Service coverage varies with conditions and location. Service availability, features and functionality vary by device and software version. See gmenvolve.com/software/onstar for details and limitations. Non-transferable and non-refundable. (Requires (UE1) OnStar. Requires one of the following Fleet or Government order types: FLS, FNR, FRC, FBC, FGO or FEF. Not available with P0K or P0L. Not available with a ship-to of Guam, Puerto Rico or the Virgin Islands.)	$819.00	$843.57

This document contains information considered Confidential between GM and its Clients uniquely. The information provided is not intended for public disclosure. Prices, specifications, and availability are subject to change without notice, and do not include certain fees, taxes and charges that may be required by law or vary by manufacturer or region. Performance figures are guidelines only, and actual performance may vary. Photos may not represent actual vehicles or exact configurations. Content based on report preparer's input is subject to the accuracy of the input provided.
Data Version: 28141. Data Updated: Apr 2, 2026 1:49:00 AM UTC.

Vehicle: [Fleet] 2026 Chevrolet Silverado MD (CC56403) 2WD Reg Cab WT (✓ Complete)

ADDITIONAL EQUIPMENT - OTHER

CODE	DESCRIPTION	MSRP	Invoice
P0U	12 Months OnStar Protect Includes up to 12 months of OnStar Protect. Confidence on the road is the only way to go. With Emergency Advisors and security services at the ready, OnStar is there for you. Working electrical system, cell reception and GPS signal required. OnStar links to emergency services. Service coverage varies with conditions and location. Service availability, features and functionality vary by device and software version. See gmenvolve.com/software/onstar for details and limitations. Non-transferable and non-refundable. (Requires (UE1) OnStar. Requires one of the following Fleet or Government order types: FLS, FNR, FRC, FBC, FGO or FEF. Not available with P0J, P0K or P0L. Not available with a ship-to of Guam, Puerto Rico or the Virgin Islands.)	$159.00	$163.77
P0V	12 Months OnStar Telematics Includes up to 12 months of OnStar Telematics. Provides actionable insights to help optimize your fleet's operations and allow remote vehicle management. OnStar Telematics does not include emergency or security services. Eligible customers must sign up for an account at gmenvolve.com/software/onstar in order to take advantage of this 12 month offer. Active connected vehicle services, working electrical system, cell reception and GPS signal required. Service coverage varies with conditions and location. Service availability, features and functionality vary by device and software version. See gmenvolve.com/software/onstar for details and limitations. Non-transferable and non-refundable. (Requires (UE1) OnStar. Requires one of the following Fleet, Fleet Daily Rental or Government order types: FDR, FLS, FNR, FRC, FBC, FGO or FEF. Not available with P0W, P0X, P0Y or P0Z. Not available with a ship-to of Guam, Puerto Rico or the Virgin Islands.)	$169.00	$174.07
P0W	24 Months OnStar Telematics Includes up to 24 months of OnStar Telematics. Provides actionable insights to help optimize your fleet's operations and allow remote vehicle management. OnStar Telematics does not include emergency or security services. Eligible customers must sign up for an account at gmenvolve.com/software/onstar in order to take advantage of this 24 month offer. Active connected vehicle services, working electrical system, cell reception and GPS signal required. Service coverage varies with conditions and location. Service availability, features and functionality vary by device and software version. See gmenvolve.com/software/onstar for details and limitations. Non-transferable and non-refundable. (Requires (UE1) OnStar. Requires one of the following Fleet, Fleet Daily Rental or Government order types: FDR, FLS, FNR, FRC, FBC, FGO or FEF. Not available with P0V, P0X, P0Y or P0Z, Not available with a ship-to of Guam, Puerto Rico or the Virgin Islands)	$349.00	$359.47
P0X	36 Months OnStar Telematics Includes up to 36 months of OnStar Telematics. Provides actionable insights to help optimize your fleet's operations and allow remote vehicle management. OnStar Telematics does not include emergency or security services. Eligible customers must sign up for an account at gmenvolve.com/software/onstar in order to take advantage of this 36 month offer. Active connected vehicle services, working electrical system, cell reception and GPS signal required. Service coverage varies with conditions and location. Service availability, features and functionality vary by device and software version. See gmenvolve.com/software/onstar for details and limitations. Non-transferable and non-refundable. (Requires (UE1) OnStar. Requires one of the following Fleet or Government order types: FLS, FNR, FRC, FBC, FGO or FEF. Not available with P0V, P0W, P0Y or P0Z. Not available with a ship-to of Guam, Puerto Rico or the Virgin Islands.)	$529.00	$544.87

This document contains information considered Confidential between GM and its Clients uniquely. The information provided is not intended for public disclosure. Prices, specifications, and availability are subject to change without notice, and do not include certain fees, taxes and charges that may be required by law or vary by manufacturer or region. Performance figures are guidelines only, and actual performance may vary. Photos may not represent actual vehicles or exact configurations. Content based on report preparer's input is subject to the accuracy of the input provided.
Data Version: 28141. Data Updated: Apr 2, 2026 1:49:00 AM UTC.

Vehicle: [Fleet] 2026 Chevrolet Silverado MD (CC56403) 2WD Reg Cab WT (✓ Complete)

ADDITIONAL EQUIPMENT - OTHER

CODE	DESCRIPTION	MSRP	Invoice
P0Y	48 Months OnStar Telematics Includes up to 48 months of OnStar Telematics. Provides actionable insights to help optimize your fleet's operations and allow remote vehicle management. OnStar Telematics does not include emergency or security services. Eligible customers must sign up for an account at gmenvolve.com/software/onstar in order to take advantage of this 48 month offer. Active connected vehicle services, working electrical system, cell reception and GPS signal required. Service coverage varies with conditions and location. Service availability, features and functionality vary by device and software version. See gmenvolve.com/software/onstar for details and limitations. Non-transferable and non-refundable. (Requires (UE1) OnStar. Requires one of the following Fleet or Government order types: FLS, FNR, FRC, FBC, FGO or FEF. Not available with P0V, P0W, P0X or P0Z. Not available with a ship-to of Guam, Puerto Rico or the Virgin Islands.)	$699.00	$719.97
P0Z	60 Months OnStar Telematics Includes up to 60 months of OnStar Telematics. Provides actionable insights to help optimize your fleet's operations and allow remote vehicle management. OnStar Telematics does not include emergency or security services. Eligible customers must sign up for an account at gmenvolve.com/software/onstar in order to take advantage of this 60 month offer. Active connected vehicle services, working electrical system, cell reception and GPS signal required. Service coverage varies with conditions and location. Service availability, features and functionality vary by device and software version. See gmenvolve.com/software/onstar for details and limitations. Non-transferable and non-refundable. (Requires (UE1) OnStar. Requires one of the following Fleet or Government order types: FLS, FNR, FRC, FBC, FGO or FEF. Not available with P0V, P0W, P0X or P0Y. Not available with a ship-to of Guam, Puerto Rico or the Virgin Islands.)	$879.00	$905.37
P1N	12 Months API Pro Includes up to 12 months of API Pro data. Optimize your fleet operations with the telematics data needed to manage your fleet vehicles and drivers. Services include Full Telemetry which includes location, speed, and comprehensive diagnostics information, additionally driving events including hard acceleration, hard braking, and seatbelt usage, plus remote commands all which can be used to best manage your fleet operations. Terms apply. Requires an active connected services plan. Fees, services, and availability subject to change. Does not include emergency or security services. Diagnostic Trouble Codes (DTC) data includes only select DTCs. Availability of data elements may vary across API plan, vehicle architecture, make, and model years. See gmenvolve.com for details and limitations. See gmenvolve.com/software/onstar for details and limitations. Non-transferable and non-refundable. Use of this API Pro Plan requires customers to enter into a GM Envolve API agreement or a services agreement with a third-party provider. Services are provided by third parties, not by GM Envolve, and are subject to separate terms and fees. See GM.envolve.com for current compatible third-party API providers. (Requires (UE1) OnStar and (FDR) Fleet Daily Rental order type. Not available with (P1R, P1S, P1T, P1U, P1Q, PRE, PR6, or RFS) API Starter or API Elite. Not available with a ship-to of Guam, Puerto Rico or the Virgin Islands.)	$0.00	$81.00

This document contains information considered Confidential between GM and its Clients uniquely. The information provided is not intended for public disclosure. Prices, specifications, and availability are subject to change without notice, and do not include certain fees, taxes and charges that may be required by law or vary by manufacturer or region. Performance figures are guidelines only, and actual performance may vary. Photos may not represent actual vehicles or exact configurations. Content based on report preparer's input is subject to the accuracy of the input provided.
Data Version: 28141. Data Updated: Apr 2, 2026 1:49:00 AM UTC.

Vehicle: [Fleet] 2026 Chevrolet Silverado MD (CC56403) 2WD Reg Cab WT (✔ Complete)

ADDITIONAL EQUIPMENT - OTHER

CODE	DESCRIPTION	MSRP	Invoice
P1O	24 Months API Pro Includes up to 24 months of API Pro data. Optimize your fleet operations with the telematics data needed to manage your fleet vehicles and drivers. Services include Full Telemetry which includes location, speed, and comprehensive diagnostics information, additionally driving events including hard acceleration, hard braking, and seatbelt usage, plus remote commands all which can be used to best manage your fleet operations. Terms apply. Requires an active connected services plan. Fees, services, and availability subject to change. Does not include emergency or security services. Diagnostic Trouble Codes (DTC) data includes only select DTCs. Availability of data elements may vary across API plan, vehicle architecture, make, and model years. See gmenvolve.com for details and limitations. See gmenvolve.com/software/onstar for details and limitations. Non-transferable and non-refundable. Use of this API Pro Plan requires customers to enter into a GM Envolve API agreement or a services agreement with a third-party provider. Services are provided by third parties, not by GM Envolve, and are subject to separate terms and fees. See GM.envolve.com for current compatible third-party API providers. (Requires (UE1) OnStar and (FDR) Fleet Daily Rental order type. Not available with (P1R, P1S, P1T, P1U, P1Q, PRE, PR6, or RFS) API Starter or API Elite. Not available with a ship-to of Guam, Puerto Rico or the Virgin Islands.)	$0.00	$162.00
P1P	36 Months API Pro Includes up to 36 months of API Pro data. Optimize your fleet operations with the telematics data needed to manage your fleet vehicles and drivers. Services include Full Telemetry which includes location, speed, and comprehensive diagnostics information, additionally driving events including hard acceleration, hard braking, and seatbelt usage, plus remote commands all which can be used to best manage your fleet operations. Terms apply. Requires an active connected services plan. Fees, services, and availability subject to change. Does not include emergency or security services. Diagnostic Trouble Codes (DTC) data includes only select DTCs. Availability of data elements may vary across API plan, vehicle architecture, make, and model years. See gmenvolve.com for details and limitations. See gmenvolve.com/software/onstar for details and limitations. Non-transferable and non-refundable. Use of this API Pro Plan requires customers to enter into a GM Envolve API agreement or a services agreement with a third-party provider. Services are provided by third parties, not by GM Envolve, and are subject to separate terms and fees. See GM.envolve.com for current compatible third-party API providers. (Requires (UE1) OnStar and (FDR) Fleet Daily Rental order type. Not available with (P1R, P1S, P1T, P1U, P1Q, PRE, PR6, or RFS) API Starter or API Elite. Not available with a ship-to of Guam, Puerto Rico or the Virgin Islands.)	$0.00	$243.00
P1Q	6 Months API Elite Includes up to 6 months of API Elite data. Data that supports not only managing your fleet but also protecting your vehicle and drivers. Through services such as Advanced Automatic Crash Notification, Theft Alarm Notification and Drive Block commands. Terms Apply. Requires an active connected services plan. Fees, services, and availability subject to change without notice. Does not include emergency or security services. Diagnostics capabilities vary by vehicle model. Not all issues will deliver alerts. Services do not prevent theft or protect against damage or loss. See gmenvolve.com for details and limitations. See gmenvolve.com/software/onstar for details and limitations. Non-transferable and non-refundable. Use of this API Elite Plan requires customers to enter into a GM Envolve API agreement or a services agreement with a third-party provider. Services are provided by third parties, not by GM Envolve, and are subject to separate terms and fees. See GM.envolve.com for current compatible third-party API providers. (Requires (UE1) OnStar and (FDR) Fleet Daily Rental order type. Not available with (P1R, P1S, P1T, P1U, R7Z, P1N, P1O, or P1P) API Starter or API Pro. Not available with a ship-to of Guam, Puerto Rico or the Virgin Islands.)	$0.00	$54.00

This document contains information considered Confidential between GM and its Clients uniquely. The information provided is not intended for public disclosure. Prices, specifications, and availability are subject to change without notice, and do not include certain fees, taxes and charges that may be required by law or vary by manufacturer or region. Performance figures are guidelines only, and actual performance may vary. Photos may not represent actual vehicles or exact configurations. Content based on report preparer's input is subject to the accuracy of the input provided.
Data Version: 28141. Data Updated: Apr 2, 2026 1:49:00 AM UTC.

Vehicle: [Fleet] 2026 Chevrolet Silverado MD (CC56403) 2WD Reg Cab WT (✔ Complete)

ADDITIONAL EQUIPMENT - OTHER

CODE	DESCRIPTION	MSRP	Invoice
P1R	6 Months API Starter Includes up to 6 months of API Starter data. Delivering data that will help efficiently maintain your fleet and provide confidence on the road for your fleet operators/drivers. Services include vehicle data such as odometer, oil life, fuel level, Diagnostic Trouble codes, EV charging information and more. Terms apply. Requires an active connected services plan. Fees, services, and availability subject to change. Does not include emergency or security services. Diagnostic Trouble Codes (DTC) data includes only select DTCs. Availability of data elements may vary across API plan, vehicle architecture, make, and model years. See gmenvolve.com for details and limitations. See gmenvolve.com/software/onstar for details and limitations. Non-transferable and non-refundable. Use of this API Starter Plan requires customers to enter into a GM Envolve API agreement or a services agreement with a third-party provider. Services are provided by third parties, not by GM Envolve, and are subject to separate terms and fees. See GM.envolve.com for current compatible third-party API providers. (Requires (UE1) OnStar and (FDR) Fleet Daily Rental order type. Not available with (R7Z, P1N, P1O, P1P, P1Q, PRE, PR6, or RFS) API Pro or API Elite. Not available with a ship-to of Guam, Puerto Rico or the Virgin Islands.)	$0.00	$6.00
P1S	12 Months API Starter Includes up to 12 months of API Starter data. Delivering data that will help efficiently maintain your fleet and provide confidence on the road for your fleet operators/drivers. Services include vehicle data such as odometer, oil life, fuel level, Diagnostic Trouble codes, EV charging information and more. Terms apply. Requires an active connected services plan. Fees, services, and availability subject to change. Does not include emergency or security services. Diagnostic Trouble Codes (DTC) data includes only select DTCs. Availability of data elements may vary across API plan, vehicle architecture, make, and model years. See gmenvolve.com for details and limitations. See gmenvolve.com/software/OnStar for details and limitations. Non-transferable and non-refundable. Use of this API Starter Plan requires customers to enter into a GM Envolve API agreement or a services agreement with a third-party provider. Services are provided by third parties, not by GM Envolve, and are subject to separate terms and fees. See GM.envolve.com for current compatible third-party API providers. (Requires (UE1) OnStar and (FDR) Fleet Daily Rental order type. Not available with (R7Z, P1N, P1O, P1P, P1Q, PRE, PR6, or RFS) API Pro or API Elite. Not available with a ship-to of Guam, Puerto Rico or the Virgin Islands.)	$0.00	$12.00
P1T	24 Months API Starter Includes up to 24 months of API Starter data. Delivering data that will help efficiently maintain your fleet and provide confidence on the road for your fleet operators/drivers. Services include vehicle data such as odometer, oil life, fuel level, Diagnostic Trouble codes, EV charging information and more. Terms apply. Requires an active connected services plan. Fees, services, and availability subject to change. Does not include emergency or security services. Diagnostic Trouble Codes (DTC) data includes only select DTCs. Availability of data elements may vary across API plan, vehicle architecture, make, and model years. See gmenvolve.com for details and limitations. See gmenvolve.com/software/OnStar for details and limitations. Non-transferable and non-refundable. Use of this API Starter Plan requires customers to enter into a GM Envolve API agreement or a services agreement with a third-party provider. Services are provided by third parties, not by GM Envolve, and are subject to separate terms and fees. See GM.envolve.com for current compatible third-party API providers. (Requires (UE1) OnStar and (FDR) Fleet Daily Rental order type. Not available with (R7Z, P1N, P1O, P1P, P1Q, PRE, PR6, or RFS) API Pro or API Elite. Not available with a ship-to of Guam, Puerto Rico or the Virgin Islands.)	$0.00	$24.00

This document contains information considered Confidential between GM and its Clients uniquely. The information provided is not intended for public disclosure. Prices, specifications, and availability are subject to change without notice, and do not include certain fees, taxes and charges that may be required by law or vary by manufacturer or region. Performance figures are guidelines only, and actual performance may vary. Photos may not represent actual vehicles or exact configurations. Content based on report preparer's input is subject to the accuracy of the input provided.
Data Version: 28141. Data Updated: Apr 2, 2026 1:49:00 AM UTC.

Vehicle: [Fleet] 2026 Chevrolet Silverado MD (CC56403) 2WD Reg Cab WT (✔ Complete)

ADDITIONAL EQUIPMENT - OTHER

CODE	DESCRIPTION	MSRP	Invoice
P1U	36 Months API Starter Includes up to 36 months of API Starter data. Delivering data that will help efficiently maintain your fleet and provide confidence on the road for your fleet operators/drivers. Services include vehicle data such as odometer, oil life, fuel level, Diagnostic Trouble codes, EV charging information and more. Terms apply. Requires an active connected services plan. Fees, services, and availability subject to change. Does not include emergency or security services. Diagnostic Trouble Codes (DTC) data includes only select DTCs. Availability of data elements may vary across API plan, vehicle architecture, make, and model years. See gmenvolve.com for details and limitations. See gmenvolve.com/software/OnStar for details and limitations. Non-transferable and non-refundable. Use of this API Starter Plan requires customers to enter into a GM Envolve API agreement or a services agreement with a third-party provider. Services are provided by third parties, not by GM Envolve, and are subject to separate terms and fees. See GM.envolve.com for current compatible third-party API providers. (Requires (UE1) OnStar and (FDR) Fleet Daily Rental order type. Not available with (R7Z, P1N, P1O, P1P, P1Q, PRE, PR6, or RFS) API Pro or API Elite. Not available with a ship-to of Guam, Puerto Rico or the Virgin Islands.)	$0.00	$36.00
PCI	Commercial Rental (Requires (WU2) TSC Ship-Thru.)	$0.00	$0.00
PCK	Commercial Lease (Requires (WU2) TSC Ship-Thru.)	$0.00	$0.00
PCL	Commercial Rental (Requires (WU2) TSC Ship-Thru.)	$0.00	$0.00
PQL	12 Months OnStar Video Telematics with Hardware Includes hardware and up to 12 months of OnStar Video Telematics. Manage driver and fleet performance using integrated video clips alongside vehicle telematics on the OnStar Vehicle Insights platform. Included dashcam provides real-time audio and visual alerts triggered by certain driving behaviors and events. The interior and front-facing exterior camera views produce video clips that can be viewed with reports and actionable insights in OnStar Vehicle Insights to help optimize fleet operations. Video Telematics with Hardware plan requires additional paid Telematics plan and is subject to terms. Lytx Surfsight AI-14 camera hardware unit is included in price of Video Telematics with Hardware plan. Installation of camera hardware is not included. Terms apply. See gmenvolve.com/software/onstar for additional details and limitations. Non-transferable and non -refundable. (Requires (UE1) OnStar. Must be ordered with (P0V) 12 Month OnStar Telematics. Requires one of the following Fleet or Government order types: FLS, FNR, FRC, FBC, FGO or FEF. Not available with PQM, PQP, PQQ or PQT. Not available with a ship-to of Guam, Puerto Rico or the Virgin Islands.)	$569.00	$586.07
PQM	24 Months OnStar Video Telematics with Hardware Includes hardware and up to 24 months of OnStar Video Telematics. Manage driver and fleet performance using integrated video clips alongside vehicle telematics on the OnStar Vehicle Insights platform. Included dashcam provides real-time audio and visual alerts triggered by certain driving behaviors and events. The interior and front-facing exterior camera views produce video clips that can be viewed with reports and actionable insights in OnStar Vehicle Insights to help optimize fleet operations. Video Telematics with Hardware plan requires additional paid Telematics plan and is subject to terms. Lytx Surfsight AI-14 camera hardware unit is included in price of Video Telematics with Hardware plan. Installation of camera hardware is not included. Terms apply. See gmenvolve.com/software/onstar for additional details and limitations. Non-transferable and non -refundable. (Requires (UE1) OnStar. Must be ordered with (P0W) 24 Month OnStar Telematics. Requires one of the following Fleet or Government order types: FLS, FNR, FRC, FBC, FGO or FEF. Not available with PQL, PQP, PQQ or PQT. Not available with a ship-to of Guam, Puerto Rico or the Virgin Islands.)	$849.00	$874.47

This document contains information considered Confidential between GM and its Clients uniquely. The information provided is not intended for public disclosure. Prices, specifications, and availability are subject to change without notice, and do not include certain fees, taxes and charges that may be required by law or vary by manufacturer or region. Performance figures are guidelines only, and actual performance may vary. Photos may not represent actual vehicles or exact configurations. Content based on report preparer's input is subject to the accuracy of the input provided.
Data Version: 28141. Data Updated: Apr 2, 2026 1:49:00 AM UTC.

Vehicle: [Fleet] 2026 Chevrolet Silverado MD (CC56403) 2WD Reg Cab WT (✓ Complete)

ADDITIONAL EQUIPMENT - OTHER

CODE	DESCRIPTION	MSRP	Invoice
PQP	36 Months OnStar Video Telematics with Hardware Includes hardware and up to 36 months of OnStar Video Telematics. Manage driver and fleet performance using integrated video clips alongside vehicle telematics on the OnStar Vehicle Insights platform. Included dashcam provides real-time audio and visual alerts triggered by certain driving behaviors and events. The interior and front-facing exterior camera views produce video clips that can be viewed with reports and actionable insights in OnStar Vehicle Insights to help optimize fleet operations. Video Telematics with Hardware plan requires additional paid Telematics plan and is subject to terms. Lytx Surfsight AI-14 camera hardware unit is included in price of Video Telematics with Hardware plan. Installation of camera hardware is not included. Terms apply. See gmenvolve.com/software/onstar for additional details and limitations. Non-transferable and non-refundable. (Requires (UE1) OnStar. Must be ordered with (P0X) 36 Month OnStar Telematics. Requires one of the following Fleet or Government order types: FLS, FNR, FRC, FBC, FGO or FEF. Not available with PQL, PQM, PQQ or PQT. Not available with a ship-to of Guam, Puerto Rico or the Virgin Islands.)	$1,119.00	$1,152.57
PQQ	48 Months OnStar Video Telematics with Hardware Includes hardware and up to 48 months of OnStar Video Telematics. Manage driver and fleet performance using integrated video clips alongside vehicle telematics on the OnStar Vehicle Insights platform. Included dashcam provides real-time audio and visual alerts triggered by certain driving behaviors and events. The interior and front-facing exterior camera views produce video clips that can be viewed with reports and actionable insights in OnStar Vehicle Insights to help optimize fleet operations. Video Telematics with Hardware plan requires additional paid Telematics plan and is subject to terms. Lytx Surfsight AI-14 camera hardware unit is included in price of Video Telematics with Hardware plan. Installation of camera hardware is not included. Terms apply. See gmenvolve.com/software/onstar for additional details and limitations. Non-transferable and non-refundable. (Requires (UE1) OnStar. Must be ordered with (P0Y) 48 Month OnStar Telematics. Requires one of the following Fleet or Government order types: FLS, FNR, FRC, FBC, FGO or FEF. Not available with PQL, PQM, PQP or PQT. Not available with a ship-to of Guam, Puerto Rico or the Virgin Islands.)	$1,399.00	$1,440.97
PQT	60 Months OnStar Video Telematics with Hardware Includes hardware and up to 60 months of OnStar Video Telematics. Manage driver and fleet performance using integrated video clips alongside vehicle telematics on the OnStar Vehicle Insights platform. Included dashcam provides real-time audio and visual alerts triggered by certain driving behaviors and events. The interior and front-facing exterior camera views produce video clips that can be viewed with reports and actionable insights in OnStar Vehicle Insights to help optimize fleet operations. Video Telematics with Hardware plan requires additional paid Telematics plan and is subject to terms. Lytx Surfsight AI-14 camera hardware unit is included in price of Video Telematics with Hardware plan. Installation of camera hardware is not included. Terms apply. See gmenvolve.com/software/onstar for additional details and limitations. Non-transferable and non-refundable. (Requires (UE1) OnStar. Must be ordered with (P0Z) 60 Month OnStar Telematics. Requires one of the following Fleet or Government order types: FLS, FNR, FRC, FBC, FGO or FEF. Not available with PQL, PQM, PQP or PQQ. Not available with a ship-to of Guam, Puerto Rico or the Virgin Islands.)	$1,669.00	$1,719.07

This document contains information considered Confidential between GM and its Clients uniquely. The information provided is not intended for public disclosure. Prices, specifications, and availability are subject to change without notice, and do not include certain fees, taxes and charges that may be required by law or vary by manufacturer or region. Performance figures are guidelines only, and actual performance may vary. Photos may not represent actual vehicles or exact configurations. Content based on report preparer's input is subject to the accuracy of the input provided.
Data Version: 28141. Data Updated: Apr 2, 2026 1:49:00 AM UTC.

Vehicle: [Fleet] 2026 Chevrolet Silverado MD (CC56403) 2WD Reg Cab WT (✓ Complete)

ADDITIONAL EQUIPMENT - OTHER

CODE	DESCRIPTION	MSRP	Invoice
PR6	24 Months API Elite Includes up to 24 months of API Elite data. Data that supports not only managing your fleet but also protecting your vehicle and drivers. Through services such as Advanced Automatic Crash Notification, Theft Alarm Notification and Drive Block commands. Terms Apply. Requires an active connected services plan. Fees, services, and availability subject to change without notice. Does not include emergency or security services. Diagnostics capabilities vary by vehicle model. Not all issues will deliver alerts. Services do not prevent theft or protect against damage or loss. See gmenvolve.com for details and limitations. See gmenvolve.com/software/onstar for details and limitations. Non-transferable and non-refundable. Use of this API Elite Plan requires customers to enter into a GM Envolve API agreement or a services agreement with a third-party provider. Services are provided by third parties, not by GM Envolve, and are subject to separate terms and fees. See GM.envolve.com for current compatible third-party API providers. (Requires (UE1) OnStar and (FDR) Fleet Daily Rental order type. Not available with (P1R, P1S, P1T, P1U, R7Z, P1N, P1O, or P1P) API Starter or API Pro. Not available with a ship-to of Guam, Puerto Rico or the Virgin Islands.)	$0.00	$216.00
PRE	12 Months API Elite Includes up to 12 months of API Elite data. Data that supports not only managing your fleet but also protecting your vehicle and drivers. Through services such as Advanced Automatic Crash Notification, Theft Alarm Notification and Drive Block commands. Terms Apply. Requires an active connected services plan. Fees, services, and availability subject to change without notice. Does not include emergency or security services. Diagnostics capabilities vary by vehicle model. Not all issues will deliver alerts. Services do not prevent theft or protect against damage or loss. See gmenvolve.com for details and limitations. See gmenvolve.com/software/onstar for details and limitations. Non-transferable and non-refundable. Use of this API Elite Plan requires customers to enter into a GM Envolve API agreement or a services agreement with a third-party provider. Services are provided by third parties, not by GM Envolve, and are subject to separate terms and fees. See GM.envolve.com for current compatible third-party API providers. (Requires (UE1) OnStar and (FDR) Fleet Daily Rental order type. Not available with (P1R, P1S, P1T, P1U, R7Z, P1N, P1O, or P1P) API Starter or API Pro. Not available with a ship-to of Guam, Puerto Rico or the Virgin Islands.)	$0.00	$108.00
R7D	Rear Suspension, LiquidSpring Prep Confirmation acknowledgement of LiquidSpring Prep Package selection (Required and only available with (91B) 13.5k LiquidSpring prep single volume rear suspension, (91C) 13.5k LiquidSpring prep stacked volume rear suspension, (91D) 15.5k LiquidSpring prep single volume rear suspension or (91E) 15.5k LiquidSpring prep stacked volume rear suspension.)	$0.00	$0.00

This document contains information considered Confidential between GM and its Clients uniquely. The information provided is not intended for public disclosure. Prices, specifications, and availability are subject to change without notice, and do not include certain fees, taxes and charges that may be required by law or vary by manufacturer or region. Performance figures are guidelines only, and actual performance may vary. Photos may not represent actual vehicles or exact configurations. Content based on report preparer's input is subject to the accuracy of the input provided.
Data Version: 28141. Data Updated: Apr 2, 2026 1:49:00 AM UTC.

Vehicle: [Fleet] 2026 Chevrolet Silverado MD (CC56403) 2WD Reg Cab WT (✔ Complete)

ADDITIONAL EQUIPMENT - OTHER

CODE	DESCRIPTION	MSRP	Invoice
R7Z	6 Months API Pro Includes up to 6 months of API Pro data. Optimize your fleet operations with the telematics data needed to manage your fleet vehicles and drivers. Services include Full Telemetry which includes location, speed, and comprehensive diagnostics information, additionally driving events including hard acceleration, hard braking, and seatbelt usage, plus remote commands all which can be used to best manage your fleet operations. Terms apply. Requires an active connected services plan. Fees, services, and availability subject to change. Does not include emergency or security services. Diagnostic Trouble Codes (DTC) data includes only select DTCs. Availability of data elements may vary across API plan, vehicle architecture, make, and model years. See gmenvolve.com for details and limitations. See gmenvolve.com/software/onstar for details and limitations. Non-transferable and non-refundable. Use of this API Pro Plan requires customers to enter into a GM Envolve API agreement or a services agreement with a third-party provider. Services are provided by third parties, not by GM Envolve, and are subject to separate terms and fees. See GM.envolve.com for current compatible third-party API providers. (Requires (UE1) OnStar and (FDR) Fleet Daily Rental order type. Not available with (P1R, P1S, P1T, P1U, P1Q, PRE, PR6, or RFS) API Starter or API Elite. Not available with a ship-to of Guam, Puerto Rico or the Virgin Islands.)	$0.00	$40.50
RFS	36 Months API Elite Includes up to 36 months of API Elite data. Data that supports not only managing your fleet but also protecting your vehicle and drivers. Through services such as Advanced Automatic Crash Notification, Theft Alarm Notification and Drive Block commands. Terms Apply. Requires an active connected services plan. Fees, services, and availability subject to change without notice. Does not include emergency or security services. Diagnostics capabilities vary by vehicle model. Not all issues will deliver alerts. Services do not prevent theft or protect against damage or loss. See gmenvolve.com for details and limitations. See gmenvolve.com/software/onstar for details and limitations. Non-transferable and non-refundable. Use of this API Elite Plan requires customers to enter into a GM Envolve API agreement or a services agreement with a third-party provider. Services are provided by third parties, not by GM Envolve, and are subject to separate terms and fees. See GM.envolve.com for current compatible third-party API providers. (Requires (UE1) OnStar and (FDR) Fleet Daily Rental order type. Not available with (P1R, P1S, P1T, P1U, R7Z, P1N, P1O, or P1P) API Starter or API Pro. Not available with a ship-to of Guam, Puerto Rico or the Virgin Islands.)	$0.00	$324.00
VG7	Label information, clean idle, optional door location	$0.00	$0.00
VQ1	Fleet Processing Option	$0.00	$0.00
VQ2	Fleet Processing Option	$0.00	$0.00
VQ3	Fleet Processing Option	$0.00	$0.00

SHIP THRU CODES

CODE	DESCRIPTION	MSRP	Invoice
SWA	Ship Thru, Produced at Springfield Assembly and shipped to M.H. Eby, West Jefferson, OH, and returned to Springfield Assembly for shipment to final destination	$0.00	$850.00
TCG	Multiple Handling Charge Truck Specialty Center to Reading Equipment, Pontiac, MI and Returned to Springfield Assembly for shipping to final destination	$0.00	$1,110.00
TCI	Multiple Handling Charge Truck Specialty Center to Monroe Truck Equipment, Flint, MI and Returned to Springfield Assembly for shipping to final destination	$0.00	$1,110.00

This document contains information considered Confidential between GM and its Clients uniquely. The information provided is not intended for public disclosure. Prices, specifications, and availability are subject to change without notice, and do not include certain fees, taxes and charges that may be required by law or vary by manufacturer or region. Performance figures are guidelines only, and actual performance may vary. Photos may not represent actual vehicles or exact configurations. Content based on report preparer's input is subject to the accuracy of the input provided.
Data Version: 28141. Data Updated: Apr 2, 2026 1:49:00 AM UTC.

Vehicle: [Fleet] 2026 Chevrolet Silverado MD (CC56403) 2WD Reg Cab WT (✔ Complete)

SHIP THRU CODES

CODE	DESCRIPTION	MSRP	Invoice
TFG	Multiple Handling Charge Truck Specialty Center to Auto Truck, Roanoke, IN and Return to Springfield Assembly for shipment to final destination	$0.00	$825.00
TVY	Ship Thru, Produced and shipped to Anchorage VDC then to TK Services and returned to Anchorage VDC for shipping to final destination Available only to orders with a final Ship-To Code for State of Alaska Dealers only	$0.00	$200.00
VAF	Ship Thru, Produced at Springfield Assembly and shipped to Fontaine Modification, Springfield, OH and returned to Springfield Assembly for shipment to final destination	$0.00	$290.00
VCT	Ship Thru, Produced in Springfield Assembly and shipped to Knapheide, Flint, MI and Returned to Springfield Assembly for shipping to final destination	$0.00	$1,020.00
VCU	Ship Thru, Produced in Springfield Assembly and shipped to Reading Equipment, Pontiac, MI and Returned to Springfield Assembly for shipping to final destination	$0.00	$1,020.00
VGH	Ship Thru, Produced in Springfield Assembly and shipped to Kaffenbarger Truck Equipment, New Carlisle, OH, and Return to Springfield Assembly for shipment to final destination	$0.00	$400.00
VNG	Ship Thru, Produced in Springfield Assembly and shipped to Monroe Truck Equipment, Flint, MI and Returned to Springfield Assembly for shipping to final destination	$0.00	$1,020.00
VVZ	Multiple Handling Charge Truck Specialty Center to Knapheide, Flint, MI and Returned to Springfield Assembly for shipping to final destination	$0.00	$1,110.00
VWG	Ship Thru, Produced in Springfield Assembly and shipped to Auto Truck, Roanoke, IN and Return to Springfield Assembly for shipment to final destination	$0.00	$735.00
VZW	Ship Thru, Produced at Springfield Assembly and shipped to Action Truck and Body, Louisville, KY, and Returned to Springfield Assembly for shipping to final destination	$0.00	$840.00
WU2	Ship Thru, Produced at Springfield Assembly and shipped to TSC (Truck Specialty Center), Springfield, OH, and returned to Springfield Assembly for shipment to final destination	$0.00	$90.00

This document contains information considered Confidential between GM and its Clients uniquely. The information provided is not intended for public disclosure. Prices, specifications, and availability are subject to change without notice, and do not include certain fees, taxes and charges that may be required by law or vary by manufacturer or region. Performance figures are guidelines only, and actual performance may vary. Photos may not represent actual vehicles or exact configurations. Content based on report preparer's input is subject to the accuracy of the input provided.
Data Version: 28141. Data Updated: Apr 2, 2026 1:49:00 AM UTC.

Vehicle: [Fleet] 2026 Chevrolet Silverado MD (CC56403) 2WD Reg Cab WT (✓ Complete)

Geared Road Speed

SPECIFICATION SUMMARY	
Model #	CC56403
Engine Order Code	L5D
Model Manufacturer	Duramax
Type	Turbocharged Diesel V8
Displacement	6.6L/403
Horsepower	350 @ 2500
Starting Torque	N/A
Transmission Order Code	MIU
Model Manufacturer	Allison
Type	6-Speed Automatic
Rear Axle Order Code	HD1
Model Manufacturer	A1700RDS
Weight Rating	15000 lbs
Ratio:1	4.10
Rear Tires	225/70R19.5G
Revolutions/Mile Front	N/A
Revolutions/Mile Rear	N/A
Surface Type	Concrete
Desired Grade	2%

Geared Road Speed

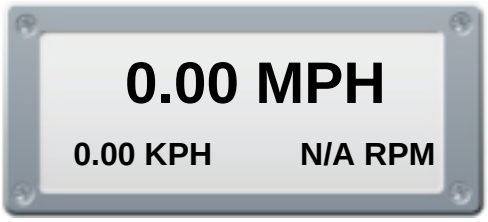

0% Grade in gear

Actual Loaded Speed

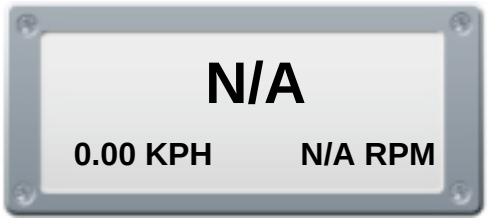

2% Grade in gear

Note: Simulated speedometer appearance may not correspond with selected equipment.

This document contains information considered Confidential between GM and its Clients uniquely. The information provided is not intended for public disclosure. Prices, specifications, and availability are subject to change without notice, and do not include certain fees, taxes and charges that may be required by law or vary by manufacturer or region. Performance figures are guidelines only, and actual performance may vary. Photos may not represent actual vehicles or exact configurations. Content based on report preparer's input is subject to the accuracy of the input provided.
Data Version: 28141. Data Updated: Apr 2, 2026 1:49:00 AM UTC.

Vehicle: [Fleet] 2026 Chevrolet Silverado MD (CC56403) 2WD Reg Cab WT (✓ Complete)

Gradeability Chart

SPECIFICATION SUMMARY	
Model #	CC56403
Engine Order Code	L5D
Model Manufacturer	Duramax
Type	Turbocharged Diesel V8
Displacement	6.6L/403
Horsepower	350 @ 2500
Starting Torque	N/A
Transmission Order Code	MIU
Model Manufacturer	Allison
Type	6-Speed Automatic
Rear Axle Order Code	HD1
Model Manufacturer	A1700RDS
Weight Rating	15000 lbs
Ratio:1	4.10
Rear Tires	225/70R19.5G
Revolutions/Mile Front	N/A
Revolutions/Mile Rear	N/A
Surface Type	Concrete
Desired Grade	2%

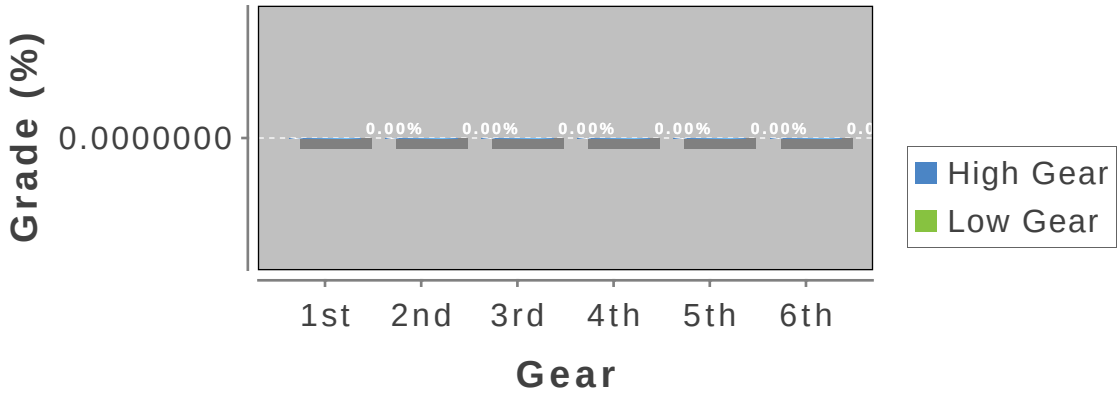

This document contains information considered Confidential between GM and its Clients uniquely. The information provided is not intended for public disclosure. Prices, specifications, and availability are subject to change without notice, and do not include certain fees, taxes and charges that may be required by law or vary by manufacturer or region. Performance figures are guidelines only, and actual performance may vary. Photos may not represent actual vehicles or exact configurations. Content based on report preparer's input is subject to the accuracy of the input provided.
Data Version: 28141. Data Updated: Apr 2, 2026 1:49:00 AM UTC.

Vehicle: [Fleet] 2026 Chevrolet Silverado MD (CC56403) 2WD Reg Cab WT (✔ Complete)

Turning Circle

SPECIFICATION SUMMARY	
Model #	CC56403
Front Axle Order Code	FTA
Capacity (lbs)	7000 lbs
Wheelbase Order Code	ED9
Wheelbase (in)	165 in
Front Wheel Order Code	
Size/Type (in)	19.5 x 6.75 in
Front Tire Order Code	XEY
Size/Type	225/70R19.5G

Wall to Wall (ft): 48.8 ft

Wall to Wall diameter is measured from the outermost part of the cab.

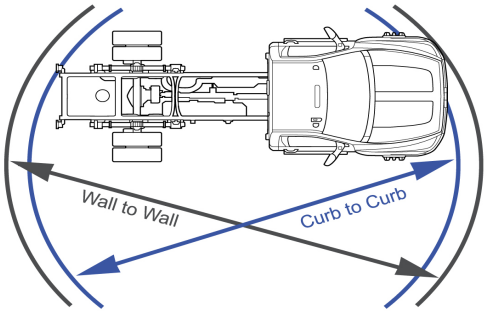

Curb to Curb (ft): 47.2 ft

Curb to Curb diameter is measured from the outside of the front tire.

This document contains information considered Confidential between GM and its Clients uniquely. The information provided is not intended for public disclosure. Prices, specifications, and availability are subject to change without notice, and do not include certain fees, taxes and charges that may be required by law or vary by manufacturer or region. Performance figures are guidelines only, and actual performance may vary. Photos may not represent actual vehicles or exact configurations. Content based on report preparer's input is subject to the accuracy of the input provided.
Data Version: 28141. Data Updated: Apr 2, 2026 1:49:00 AM UTC.